UDC 700
Universal Digital Controller and Indicator

Specification

Overview

The UDC 700 is a 1/32 DIN (49 x 25 mm) controller which combines a high degree of technology and quality with a low price. Its large red display provides a large, clear and quick indication of the essential information you need. It is ideally suited for a large number of applications.

An indicator version is also available.

Based on the same technology as the UDC 1000/1500 low price controllers, the UDC 700 is the ideal companion to those controllers for less complex applications requiring UDC performance in a space-limited installation.

Figure 1—UDC 700 Controller

Features

Moisture Resistant Front Face—Meets NEMA 4/IP66 front face protection against dust and water.

Universal Power—Can operate on any line voltage from 90 Vac to 264 Vac at 50/60 Hz. A 24 Vac/dc option is also available.

Universal Input—All input types (Thermocouples, RTDs, and Linear DC mA/mVs) are field configurable. The input is isolated from the output except for the SSR Driver.

Large Display—A 10 mm (0.4 inch) four-digit red LED display makes the UDC 700 easy to read from a distance and view for configuration.

Output Types—Standard outputs available are either a 2 amp Relay Control Output plus an SSR Driver Alarm 1 *OR* an SSR Driver Control Output plus a 2 amp Relay Alarm 1.

Alarms—Alarm 1 is available as a Relay or an SSR Driver. An optional Relay is available as Alarm 2. Alarm 2 is mutually exclusive with communications. The alarm types can be set on PV high, PV low, or Deviation (high or low).

Configuration—Easy and full configuration with straightforward menu via the instrument front face or configuration port. No hardware configuration needed.

Approvals—UL and CE standard feature.

RS485 Modbus Communications—Modbus Communications Protocol is an optional feature which is mutually exclusive with Alarm 2. It is half-duplex and has selectable Baud rate (see page 2). Not field upgradable.

Automatic Tuning—Hands off PID tuning or manual tuning with "pretune" available as standard.

Two Local Setpoints—One or two setpoints available and selectable from keypad.

Printed in U.S.A. © Copyright 1998—Honeywell Inc.

Industrial Measurement and Control, 1100 Virginia Drive, Fort Washington, PA 19034

Alpha ENGENHARIA

ALPHA ENGENHARIA - Equipamentos e Soluções Industriais
Tel. 220 136 963 | Tlm: 933 694 486
info@alphaengenharia.pt | www.alphaengenharia.pt

Specifications

Technical Data	
Accuracy	*Measurement:* 0.1% of span ±1 LSD (0.25% for Types J and T) *Linearization for T/C and RTD:* Better than ±0.2°C for decimal range; better than ±0.5°C for integer range *Cold Junction Compensation (T/C only):* Better than ±1°C
Temperature Stability	0.01% of span per °C
Input Signal Failure	*For Thermocouple and RTDs:* Upscale burnout *For Linear Input:* Downscale burnout (only applicable to 4-20 mA)
Input Sampling Rate	Four samples per second
Input Filter	*Digital Filter:* 0.0 (off), from 0.5 to 100.0 seconds in 0.5-second increments
Input Resolution	14 bits approximately, always four times better than display resolution
Input Isolation	Universal input isolated at 2500V from all outputs and from power supply (except for SSR Driver)
Stray Rejection	*Common Mode Rejection:* >120 dB at 50/60 Hz with negligible effect at 264V *Serial Mode Rejection:* >500% of span at 50/60 Hz with negligible effect
Approvals	UL and CE
Environmental	*EMI Immunity:* Meets EN50082-2 part 2 *EMI Emission:* Meets EN50081-2 part 2 *Safety Considerations:* Complies with EN61010-1
Front Panel Sealing	NEMA 4/IP66
Power Consumption	4 watts maximum
Physical	*Weight:* 480 grams (16.9 ounces) maximum *Wiring Connection:* Screw terminals on the rear of the case (combination head)
Output Type	**Type available:** *Output 1:* Electromechanical relay Control Output (SPST) + SSR Driver for Alarm 1 *Output 2:* SSR Driver Control Output + Electromechanical relay (SPST) for Alarm 1 **Electromechanical Relay:** SPST contact with 2A at 120V or 240V (resistive load); isolated *Lifetime:* >500,000 operations at rated voltage/current **SSR Driver:** >10 Vdc into 500 ohms minimum (50 mA maximum); not isolated from input
Alarms	*Alarm 1:* Relay output (SPST) or SSR Driver output *Alarm 2:* Relay output (SPST) (mutually exclusive with communications) *Alarm Types:* PV high or low, Deviation high or low
Tuning Parameters	*PB:* 5% to 999.9% *Reset (Integral Time):* 1 sec. to 99 min. 59 sec. and “OFF”; MR = 0-100% *Rate (Derivative Time):* 0 (OFF) to 9 min. 59 sec.
Communications	RS485, Modbus protocol, Half Duplex, Baud Rate: 1200, 2400, 4800, or 9600. 32 maximum drops.
Control Algorithm	PID or ON/OFF; Direct or Reverse acting *ON/OFF Hysteresis:* 0.1% to 10.0% of input span. NOTE: No **Manual** mode available.

Specifications, continued

Input Actuations

		°F	°C
Thermocouple Types (Fixed Decimal)	B	211 to 3315	100 to 1824
	J	–328 to 2191	–200 to 1200
	J	–198.4 to 998.5	–128 to 537
	K	–198.4 to 998.0	–128 to 536.7
	K	–400 to 2499	–240 to 1371
	N	32 to 2550	0 to 1399
	R	32 to 3198	0 to 1759
	S	32 to 3217	0 to 1770
	T	–400 to 753	–240 to 401
	T	–198.4 to 753	–128 to 400.6
RTD (3-wire connection) (Fixed decimal)	PT100 (IEC) = 0.00385	–327 to 1475 –198.3 to 998.5	–199 to 802 –127.9 to 557
DC Linear	4-20 mA 0-20 mA 10-50 mV 0-50 mV	–1999 minimum Range 9999 maximum Range With 0, 1, 2, or 3 decimal points	

Environmental and Operating Conditions

Parameter	Reference Conditions	Operative Limits	Transportation and Storage
Ambient Temperature	20 ± 2°C 68 ± 4°F	0 to 55°C 32 to 131°F	–20 to 80°C –4 to 176°F
Relative Humidity	60-70%	20-95% non-condensing	
Voltage	90 to 240 Vac ±1%	90 to 264 Vac 24 Vac or 12 to 30 Vdc	
Frequency	50 Hz	50-60 Hz	
Source Resistance	<10 ohms for thermocouple	1000 ohms maximum for thermocouple	
Lead Resistance for RTD	<0.1 ohm/lead (PT100)	50 ohms per lead maximum balanced (PT100)	

Model Number Interpretation

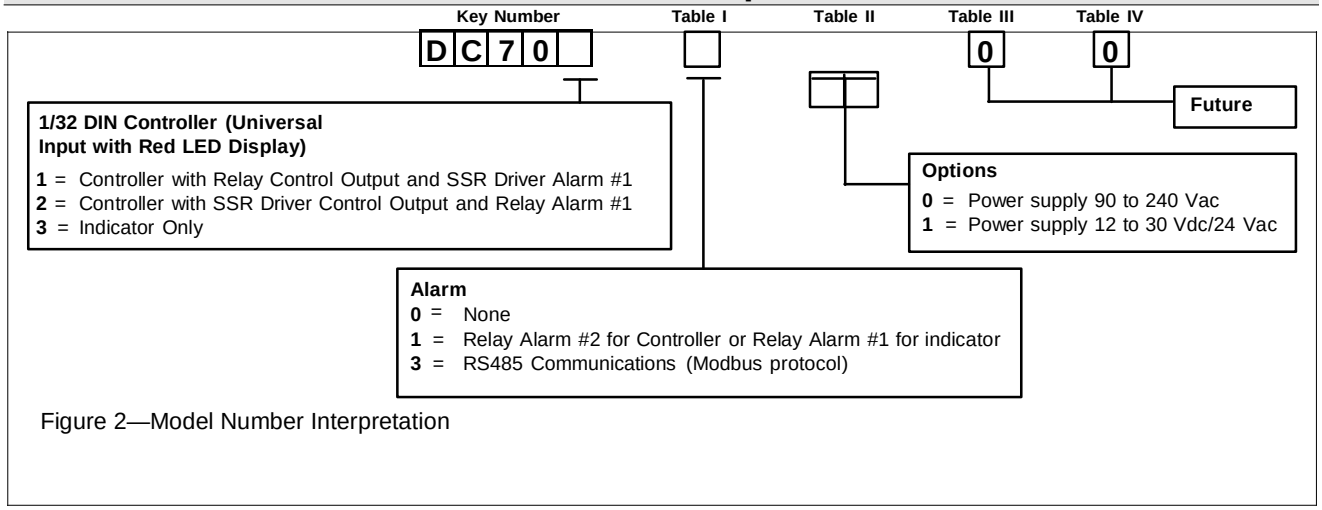

Figure 2—Model Number Interpretation

External Dimensions and Panel Cutout

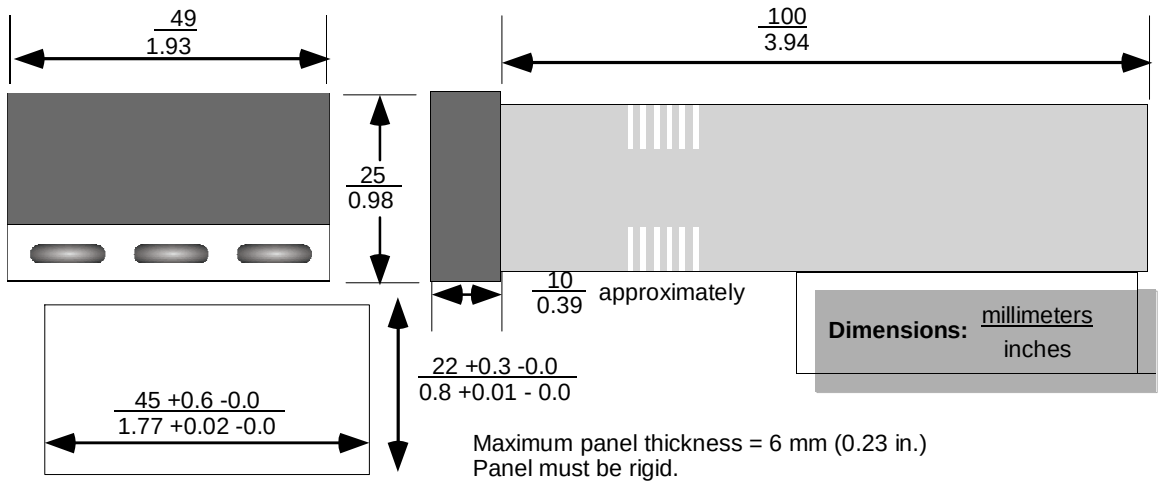

Figure 3—UDC 700 Controller Cut-out Dimensions – **not to scale**