MAGNETIC LEVEL GAUGES

Magnetic level gauge indicates the level of fluid inside a tank by using the magnetic properties of its elements.

A by-pass (which mainly consists of a tube longer than the fluid range) is connected to the tank containing the fluid whose level is to be measured.

A float containing a magnet moves up and down the tube, and its position determines the tank fluid level (the level is clearly indicated by red and white markers).

Variation in fluid level causes the float to move and the float magnet then makes the roller display (which also contains a magnet) rotate.

Red markers are normally shown in the part of the tank holding the fluid and white markers in the part containing the gas/steam.

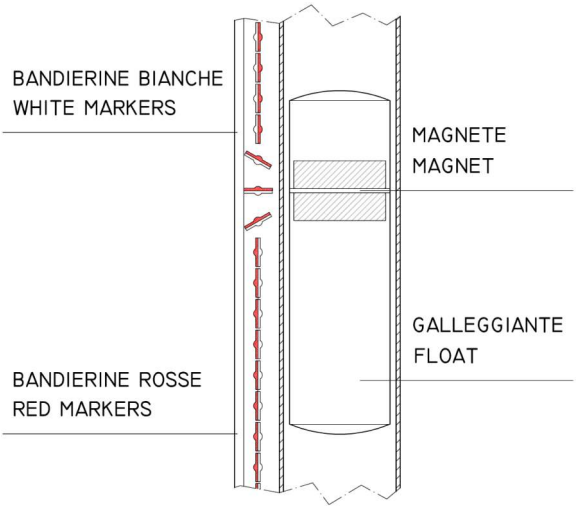

Magnetic level gauge with flanged connections, magnetic switches and level transmitter

Magnetic level gauge with flanged shut-off cocks, drain cock and level transmitter

Magnetic level gauges are built exclusively according to the centre-to-centre distance specified by the customer.
The reading length usually matches the centre-to-centre distance.

The roller display reading point and the height of the level switches can be adjusted quickly and easily thanks to specially designed clamping brackets.

The simple mounting principle means that electronic accessories can be fitted to the gauge at a later stage.
The materials used to manufacture the gauges differ depending on their intended use.
Given that the level gauge works as a result of its magnetic properties, no ferromagnetic materials have been used in its construction.

The standard model features an AISI 316L stainless steel tube and float, but there are various alternatives: synthetic polymer, special alloy or PTFE lined tubes, as well as titanium, PVDF, PVC, PTFE or PP floats.

DIESSE also offers a wide range of optional accessories, including: shut-off valves, drain valves, vent valves, calibrated scale, bistable switches and level transmitters (described later on in the catalogue).

TO RECOMMEND THE MOST SUITABLE LEVEL GAUGE, PLEASE PROVIDE THE FOLLOWING ESSENTIAL DATA WHEN ASKING FOR ADVICE OR QUOTATION.

► essential data

- ► **CENTRE-TO-CENTRE DISTANCE (distance between process connections)**
- ► **TYPE OF CONNECTIONS (flanged-threaded-weld-on) and related STANDARDS (UNI-ANSI-DIN…)**
- POSITION OF PROCESS CONNECTIONS
- POSITION OF THE VALVE HANDLING
- ► **TYPE OF FLUID**
- ► **SPECIFIC WEIGHT OF FLUID**
- ► **DESIGN AND MAXIMUM OPERATING PRESSURES**
- ► **DESIGN AND MAXIMUM OPERATING TEMPERATURES**
- ANY ADDITIONAL ACCESSORIES

Magnetic level gauges are suitable for a wide range of applications and are a perfect alternative to glass level gauges if the latter cannot be used safely.

They are particularly recommended:

- in cases where a particularly accurate fluid level reading is not necessary
- in cases where the maximum pressure and temperature values exceed those listed in the technical specifications of the glasses
- if remote readings have to be taken (e.g. if the level gauge is positioned above or a considerable distance away from the observer's position)
- if continuous readings using a remote gauge situated some distance away from the system are necessary
- if one or more signals (i.e. alarm signals) are required to indicate various tank liquid levels
- if the centre-to-centre distance exceeds 3 metres

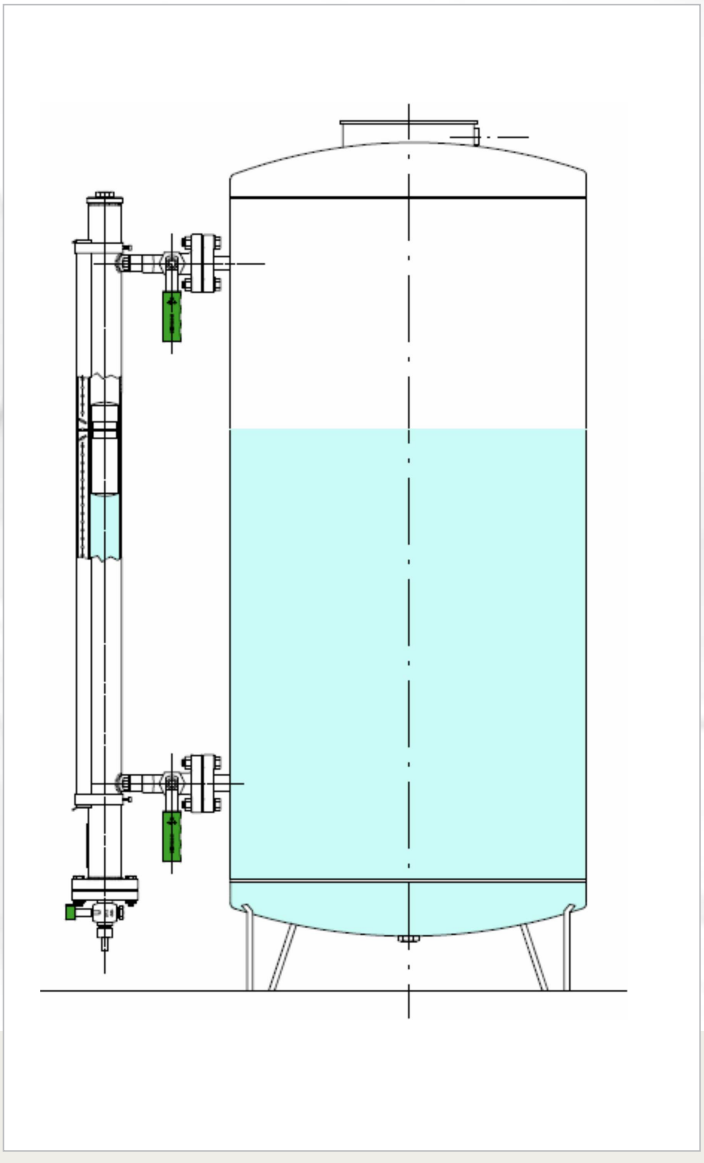

MAGNETIC LEVEL GAUGES

DIESSE magnetic level gauges are manufactured and certified in accordance with the strictest international standards.

CERTIFICATO

Sorveglianza della Verifica Finale

in accordo alla Direttiva 97/23/CE

Certificato No.: 07/039-VF3640

Categoria: II

Nome e Indirizzo del Fabbricante: Diesse s.r.l. Fluid Control, Via Dell'Artigianato 10/12, 21040 Origgio

A seguito degli accertamenti effettuati, il Fabbricante è autorizzato ad apporre, in corrispondenza della Marcatura CE, il numero identificativo sottoriportato su ciascuna attrezzatura a pressione prodotta:

CE 1131

Procedura in accordo alla Direttiva 97/23/CE: Controllo di fabbricazione interno e sorveglianza della verifica finale (Module A1)

Rapporto di Audit No: 07/0039-RA001 del 13/03/2007

Descrizione delle attrezzature a pressione: Indicatore di livello a sensore magnetico MCND5001 Rev.2

Luogo di produzione: c/o Diesse s.r.l. Fluid Control, Via Dell'Artigianato 10/12, 21040 Origgio

CONSORZIO EUROPEO CERTIFICAZIONE

L'ORGANO DELIBERANTE

Legnano, 13 marzo 2007

Il Direttore Tecnico (A. FUGAZZI)

Il Direttore Generale (M. SCASSO)

CEC - CONSORZIO EUROPEO CERTIFICAZIONE

ISTITUTO ITALIANO DELLA SALDATURA

ENTE MORALE

CERTIFICATO N. 279

Si certifica che la Società

DIESSE SRL FLUID CONTROL

(Sede legale) VIA DELL'ARTIGIANATO 10/12 - 21040 ORIGGIO - VA)

Unità operativa / Branch: VIA DELL'ARTIGIANATO 10/12 - 21040 ORIGGIO (VA)

applica un Sistema di Gestione per la Qualità conforme ai requisiti della norma

UNI EN ISO 9001:2000

ISO 9001:2000

per i seguenti prodotti / for the following products:

Produzione di indicatori e trasmettitori di livello, rubinetterie industriali, strumentazione industriale e prodotti affini

Settori EA / EA Sectors 19

Il presente certificato è soggetto al rispetto delle condizioni stabilite nel Regolamento IIS per la certificazione di Aziende

Prima Emissione / First Issue: 19/11/2007

Emissione Corrente / Current Issue: 19/11/2007

Data di Scadenza / Expiry Date: 16/11/2010

L'Organo Deliberante

Il responsabile della Divisione CER

Models are also available both ATEX 94/9/EC approved and with various Notified International Bodies approvals:

Aside from the type of fluid in the tank, the choice of level gauge mainly depends on the operating and design temperature/pressure values.
These must always be clearly specified when asking for a quote or placing an order.

Magnetic level gauges differ in terms of their pressure ratings under operating conditions:
low, medium and high.

Materials / Specifications:

The different versions available are as follows:

Class
PN 16 - PN 25
PN 40
PN 63
PN 100
PN 160
PN 250 - PN 400

Execution
With steam tracing system
Liquid gas design
E-CTFE coated
PFA coated
E-TFE coated
PVC
Polypropylene
PVDF
For guided wave radar
Top mounted

Chamber
Stainless steel 316L
Stainless steel 316Ti
Stainless steel electro-polished
Stainless steel E-CTFE coated
Stainless steel PFA coated
Stainless steel E-TFE coated
Titanium
Hastelloy C
Superaustenitic stainless steel (6Mo)
PVC
Polypropylene
PVDF

Float
Stainless steel 316L
Stainless steel 316Ti
Titanium Grade 2
Hastelloy C
PVC
Polypropylene
PVDF
Stainless steel E-CTFE coated
Stainless steel PFA coated
Titanium E-CTFE coated
Titanium PFA coated
Borosilicate glass

Housing / Rollers
Aluminium / Brass epoxy painted
Aluminium / PBT
Aluminium / Ceramic
With stainless steel cover / PBT
With stainless steel cover / Ceramic

Process connections position:
- standard: side/side
- additional options: side/bottom; top/side; top/bottom

Process connections type:
- standard: with flanges, threaded tubes and butt weld tubes
- additional options: shut off cocks (side/side) on request

Drain:
- standard: threaded 1/2" with plug
- additional options: threaded cock; other extras on request

Vent:
- standard: threaded 1/2" with plug
- additional options: threaded cock; other extras on request

Gaskets:
- standard: graphite/AISI 316
- additional options: PTFE/AISI 316, other extras on request

Accessories:
Magnetic switch, Level transmitter, Control unit, Calibrated scale, Non-frosting extension, Minimum level arrow, Shut-off cocks, Drain cock, Vent cock, Cocks handles lock (see from page 2.13)

Certificazioni (A richiesta):
- ATEX
- Tests and inspection by Notified Bodies
- Others on request

All DIESSE products are individually checked and tested in accordance with company quality procedures and the industry regulations currently in effect. Certificates can be issued on request.

DIESSE S.r.l.
Fluid Control

MAGNETIC LEVEL GAUGES

Code

1 Basic Type

DS MG	DIESSE Magnetic level gauge

2 Level Gauge Model

Pos. 1: Level Gauge type

DS-BP	Stainless steel 316L (Low pressure)
DS-MP	Stainless steel 316L (Medium Pressure)
DS-V	Stainless steel 316Ti or 316L (High Pressure)
DS-TI	Titanium
DS-HC	Hastelloy C
DS-MO	Superaustenitic stainless steel (6 Mo)
DS-VEEC	Stainless steel E-CTFE coated
DS-PFA	Stainless steel PFA coated
DS-VETF	Stainless steel E-TFE coated
DS-P	PVC
DS-PP	Polypropylene
DS-PF	PVDF

3 Process connections

Pos. 1: Nominal dimension **Pos. 2: Nominal pressure** **Pos. 3: Type / Finish**

Pos. 4: Position

Standard	Side / Side
/SB	Side / Bottom
/TS	Top / Side
/TB	Top / Bottom

4 Distance Centre-to-centre

M…	Distance between connections centres in mm

5 Materials

Pos. 1: Chamber

SS	Stainless steel 316L
V	Stainless steel 316Ti
TI	Titanium
HC	Hastelloy C
MO	Superaustenitic stainless steel (6Mo)
VEEC	Stainless steel 316Ti E-CTFE coated
PFA	Stainless steel 316Ti PFA coated
VETF	Stainless steel 316Ti E-TFE coated
P	PVC
PP	Polypropylene
PF	PVDF

Pos. 2: Connections / Bottom flanges / Flat top with plug

SS	Stainless steel 316L
V	Stainless steel 316Ti
TI	Titanium
HC	Hastelloy C
MO	Superaustenitic stainless steel (6Mo)
VEEC	Stainless steel 316Ti E-CTFE coated
PFA	Stainless steel 316Ti PFA coated
VETF	Stainless steel 316Ti E-TFE coated
P	PVC
PP	Polypropylene
PF	PVDF

Pos. 3: Roller display - Housing / Rollers

DAB	Aluminium housing with brass with epoxy paint rollers
MRA	Aluminium housing with PBT rollers
MRK	Aluminium housing with ceramic rollers
MNAV	Housing with stainless steel cover and PBT rollers
MNKV	Housing with stainless steel cover and ceramic rollers

Pos. 4: Float

SS	Acciaio inox 316L
TG2	Titanium Grade 2
TG2R	Titanium Grade 2 with reinforcements
ZVSS	Stainless steel 316Ti
ZHCS	Hastelloy C
ZPSS	PVC
ZPPSS	Polypropylene
ZPFSS	PVDF

Pos. 5: Gaskets

Standard:	Graphite/316
PF	PTFE/316

6 Accessories

EBS (Type)	Magnetic switch	LTM	Level transmitter	RCU	Control unit
GR18	Cylindrical plug shut off cocks	D12	Cylindrical plug drain cock	D12S	Cylindrical plug vent cock
SHV	Shut off globe valves	DHV	Drain globe valve	DHVS	Vent globe valve
VSG	Calibrated scale	MLA	Minimum level arrow	NFE	Non-frosting extension
CB	Support bracket	TDR	Microwave transmitter	SSHD	Cocks handles lock

7 Approvals

EEx	ATEX	SHP…	Marine

Code **1** **2** **3** **4** **5** **6**

e.g. DS MG - DSBP - 20/16/RF - M 1000 - SS/SS/DAB/SS - GR18/D12/VSG/ 3 TIM NSM 1240
(Code EBS = quantity and type)

DIESSE S.r.l.
Fluid Control

MAGNETIC LEVEL GAUGE

PN16 and PN25 / Class 150

DS MG - DS BP

Code: DS MG - DSBP - … /16/RF - M…- SS/SS/…/SS

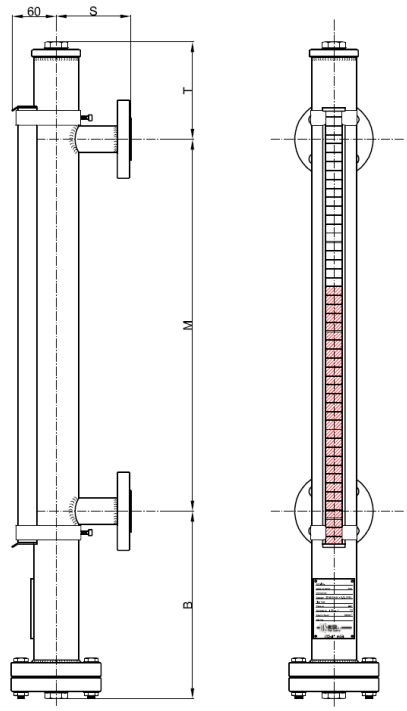

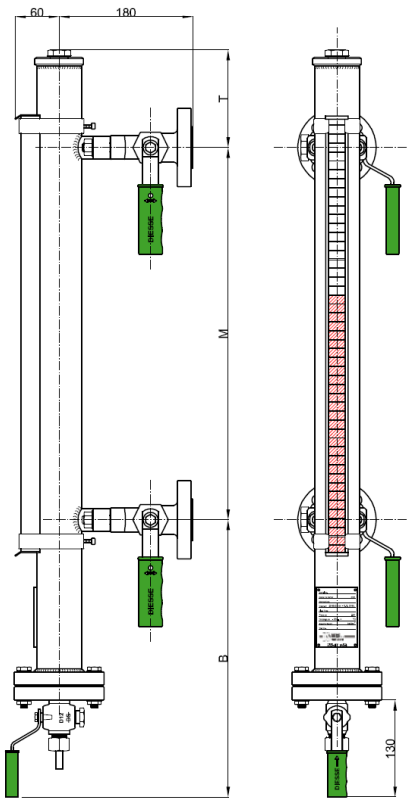

Technical data

Service conditions
Max Pressure: PN16 and PN25
Max temperature: 200°C and 300°C

Standard execution:
Float: Max pressure 16 bar
Pressure > 16 bar and up to 25 bar with reinforcements

Rollers: Max temperature 200°C
Temperature up to 300°C with ceramic rollers

Specific weight: ≥ 0,65 g/cm^3
< 0,65 g/cm^3 with special float

View
Standard: adjustable on 360° in the installation phase

Distance (Centre-to-centre)
On request, distances up to 5.600 mm in one sole piece (Fixed distance, not adjustable)
Option: On request distances over 5.600 mm (In several pieces)

Materials (Standard)

Chamber:	Stainless steel 316L (Ø 60,3 x 2 mm)
Float:	Stainless steel (Ø 50 mm for S.W. ≥ 1,0 g/cm^3)
	Titanium Grade 2 (Ø 50 mm for S.W. ≤ 1,0 g/cm^3)
Process connections:	Stainless steel (flanged, threaded pipes, butt weld pipes)
	With cocks: Carbon steel A105 cocks or Stainless steel 316L cocks
Rollers:	Brass with red and white epoxy paint, aluminium housing, glass cover (Temperature ≤ 200°C)
	Red and white ceramic, aluminium housing, glass cover (Temperature > 200°C up to 300°C)

Options: chamber and float in other materials; roller display housing with stainless steel cover

Gaskets
Standard: graphite/AISI 316 Options: PTFE/AISI 316

Process connections

Standard flanges:	UNI PN16/40 DN15-20-25	ANSI#150-300/RF DN ½“ - ¾“ - 1“
Standard threaded pipes:	BSP-M ½” - ¾” - 1”	NPT-M ½” - ¾” - 1”
	BSP-F ½” - ¾” - 1”	NPT-F ½” - ¾” - 1”
Standard butt weld pipes:	BW ½” - ¾” - 1”	SW ½” - ¾” - 1”

Options: further connections type or connections with cocks (see details at page 2.13 and 2.14)

Vent: Standard: threaded ½” with plug Options: On request, with flange or with cock (see details at page 2.13 and page 2.14)

Drain: Standard: threaded ½” with plug Options: On request, with flange or with cock (see details at page 2.13 and page 2.14)

Process connections with shut off cocks: (see details at page 2.13 and page 2.14)
Cocks type DS GR18: cylindrical plug type - Straight type - Quick 90° closing
Valves type DS SHV: globe type - Opening/Closing by handwheel

Dimensions
B = Distance depending on the specific weight of the fluid and weight of float
T = 130 mm (Standard); Option: on request
S = 100 mm (Standard); Option: on request

Accessories

Shut off cocks	(see details from page 2.13)
Drain cock	(see details from page 2.13)
Vent cock	(see details from page 2.13)
Calibrated scale	(see details from page 2.14)
Magnetic switches	(see details from page 2.15)
Level transmitter	(see details from page 2.23)
Contro unit	(see details from page 2.27)

Weights
Magnetic level gauge: Kg. 12,0 approx. (with centre-to-centre 1.000 mm and flanges DN20 PN16)
Cocks type DS GR18: Kg. 6,2 approx. (with flanges UNI DN20 PN40)
Valves type DS SHV: Kg. 10,6 approx. (with flanges UNI DN20 PN40)

Spare parts
For routine maintenance are not necessary spare parts.
For cocks and valves see from page 1.72 of the catalog relative to the glass level gauges.

DIESSE S.r.l.
Fluid Control

MAGNETIC LEVEL GAUGE

PN16 and PN25 / Class 150

DS MG - DS BP

Code: DS MG - DSBP - 1/2" GAS-M - M…- SS/SS/…/SS

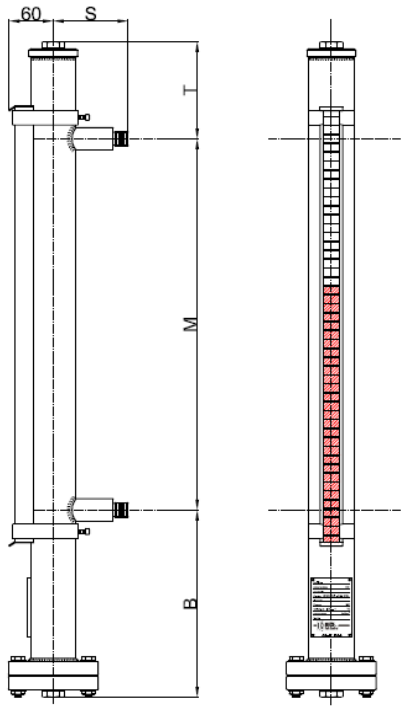

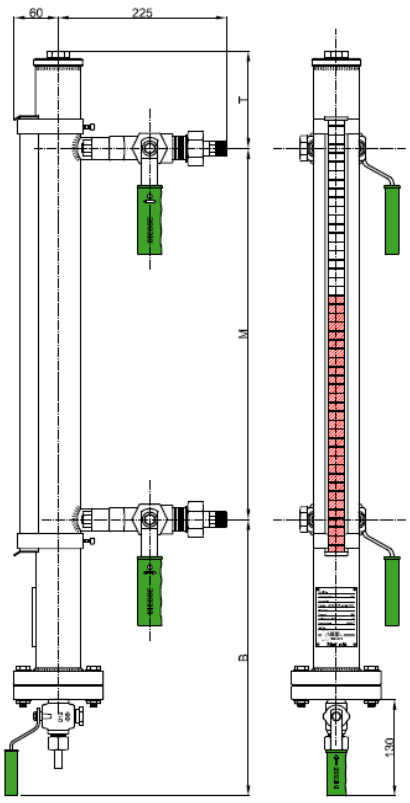

Technical data

Service conditions
Max Pressure: PN16 and PN25
Max temperature: 200°C and 300°C

Standard execution:
Float: Max pressure 16 bar
Pressure > 16 bar and up to 25 bar with reinforcements

Rollers: Max temperature 200°C
Temperature up to 300°C with ceramic rollers

Specific weight: ≥ 0,65 g/cm^3
< 0,65 g/cm^3 with special float

View
Standard: adjustable on 360° in the installation phase

Distance (Centre-to-centre)
On request, distances up to 5.600 mm in one sole piece (Fixed distance, not adjustable)
Option: On request distances over 5.600 mm (In several pieces)

Materials (Standard)

Chamber:	Stainless steel 316L (Ø 60,3 x 2 mm)
Float:	Stainless steel (Ø 50 mm for S.W. ≥ 1,0 g/cm^3)
	Titanium Grade 2 (Ø 50 mm for S.W. ≤ 1,0 g/cm^3)
Process connections:	Stainless steel (flanged, threaded pipes, butt weld pipes)
	With cocks: Carbon steel A105 cocks or Stainless steel 316L cocks
Rollers:	Brass with red and white epoxy paint, aluminium housing, glass cover (Temperature ≤ 200°C)
	Red and white ceramic, aluminium housing, glass cover (Temperature > 200°C up to 300°C)

Options: chamber and float in other materials; roller display housing with stainless steel cover

Gaskets
Standard: graphite/AISI 316 Options: PTFE/AISI 316

Process connections

Standard flanges:	UNI PN16/40 DN15-20-25	ANSI#150-300/RF DN ½" - ¾" - 1"
Standard threaded pipes:	BSP-M ½" - ¾" - 1"	NPT-M ½" - ¾" - 1"
	BSP-F ½" - ¾" - 1"	NPT-F ½" - ¾" - 1"
Standard butt weld pipes:	BW ½" - ¾" - 1"	SW ½" - ¾" - 1"

Options: further connections type or connections with cocks (see details at page 2.13 and 2.14)

Vent: Standard: threaded ½" with plug Options: On request, with flange or with cock (see details at page 2.13 and page 2.14)

Drain: Standard: threaded ½" with plug Options: On request, with flange or with cock (see details at page 2.13 and page 2.14)

Process connections with shut off cocks: (see details at page 2.13 and page 2.14)
Cocks type DS GR18: cylindrical plug type - Straight type - Quick 90° closing
Valves type DS SHV: globe type - Opening/Closing by handwheel

Dimensions
B = Distance depending on the specific weight of the fluid and weight of float
T = 130 mm (Standard); Option: on request
S = 100 mm (Standard); Option: on request

Accessories

Shut off cocks	(see details from page 2.13)
Drain cock	(see details from page 2.13)
Vent cock	(see details from page 2.13)
Calibrated scale	(see details from page 2.14)
Magnetic switches	(see details from page 2.15)
Level transmitter	(see details from page 2.23)
Contro unit	(see details from page 2.27)

Weights
Magnetic level gauge: Kg. 12,0 approx. (with centre-to-centre 1.000 mm and flanges DN20 PN16)
Cocks type DS GR18: Kg. 3,8 approx. (with flanges UNI DN20 PN40)
Valves type DS SHV: Kg. 8,8 approx. (with flanges UNI DN20 PN40)

Spare parts
For routine maintenance are not necessary spare parts.
For cocks and valves see from page 1.72 of the catalog relative to the glass level gauges.

DIESSE S.r.l.
Fluid Control

MAGNETIC LEVEL GAUGE

PN40

DS MG - DS MP

Code: DS MG - DSMP - … /40/RF - M…- SS/SS/…/SS

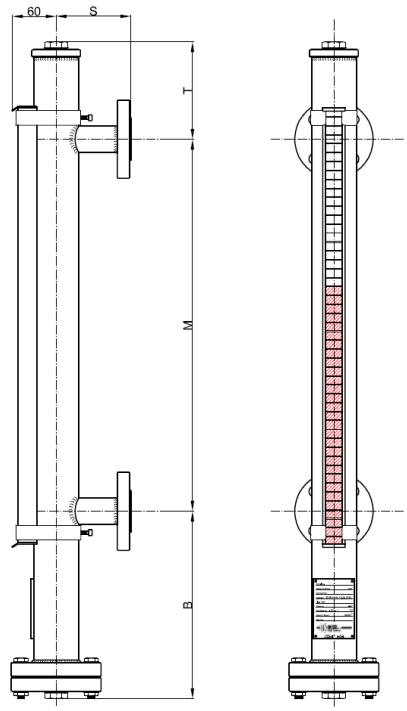

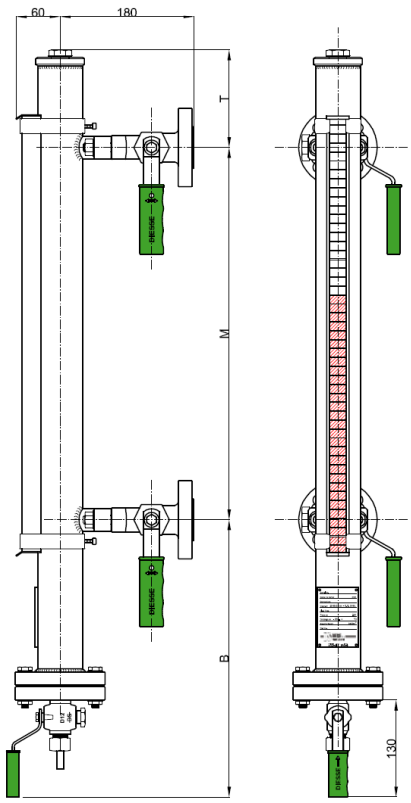

Technical data

Service conditions
Max Pressure: PN40
Max temperature: 200°C and 300°C

Standard execution:
Float: Max pressure 40 bar

Rollers: Max temperature 200°C
Temperature up to 300°C with ceramic rollers

Specific weight: ≥ 0,65 g/cm^3
< 0,65 g/cm^3 with special float

View
Standard: adjustable on 360° in the installation phase

Distance (Centre-to-centre)
On request, distances up to 5.600 mm in one sole piece (Fixed distance, not adjustable)
Option: On request distances over 5.600 mm (In several pieces)

Materials (Standard)

Chamber:	Stainless steel 316L (Ø 60,3 x 2,77 mm)
Float:	Stainless steel (Ø 50 mm for S.W. ≥ 1,0 g/cm^3)
	Titanium Grade 2 (Ø 50 mm for S.W. ≤ 1,0 g/cm^3)
Process connections:	Stainless steel (flanged, threaded pipes, butt weld pipes)
	With cocks: Carbon steel A105 cocks or Stainless steel 316L cocks
Rollers:	Brass with red and white epoxy paint, aluminium housing, glass cover (Temperature ≤ 200°C)
	Red and white ceramic, aluminium housing, glass cover (Temperature > 200°C up to 300°C)

Options: chamber and float in other materials; roller display housing with stainless steel cover

Gaskets
Standard: graphite/AISI 316 Options: PTFE/AISI 316

Process connections

Standard flanges:	UNI PN40 DN15-20-25	ANSI#300-600/RF DN ½“ - ¾“ - 1“
Standard threaded pipes:	BSP-M ½” - ¾” - 1”	NPT-M ½” - ¾” - 1”
	BSP-F ½” - ¾” - 1”	NPT-F ½” - ¾” - 1”
Standard butt weld pipes:	BW ½” - ¾” - 1”	SW ½” - ¾” - 1”

Options: further connections type or connections with cocks (see details at page 2.13 and 2.14)

Vent: Standard: threaded ½” with plug Options: On request, with flange or with cock (see details at page 2.13 and page 2.14)

Drain: Standard: threaded ½” with plug Options: On request, with flange or with cock (see details at page 2.13 and page 2.14)

Process connections with shut off cocks: (see details at page 2.13 and page 2.14)
Cocks type DS GR18: cylindrical plug type - Straight type - Quick 90° closing
Valves type DS SHV: globe type - Opening/Closing by handwheel

Dimensions
B = Distance depending on the specific weight of the fluid and weight of float
T = 130 mm (Standard); Option: on request
S = 100 mm (Standard); Option: on request

Accessories

Shut off cocks	(see details from page 2.13)
Drain cock	(see details from page 2.13)
Vent cock	(see details from page 2.13)
Calibrated scale	(see details from page 2.14)
Magnetic switches	(see details from page 2.15)
Level transmitter	(see details from page 2.23)
Contro unit	(see details from page 2.27)

Weights
Magnetic level gauge: Kg. 12,0 approx. (with centre-to-centre 1.000 mm and flanges DN20 PN40)
Cocks type DS GR18: Kg. 6,2 approx. (with flanges UNI DN20 PN40)
Valves type DS SHV: Kg. 10,6 approx. (with flanges UNI DN20 PN40)

Spare parts
For routine maintenance are not necessary spare parts.
For cocks and valves see from page 1.72 of the catalog relative to the glass level gauges.

DIESSE S.r.l.
Fluid Control

MAGNETIC LEVEL GAUGE

PN40

DS MG - DS MP

Code: DS MG - DSBP - 1/2" GAS-M - M…- SS/SS/…/SS

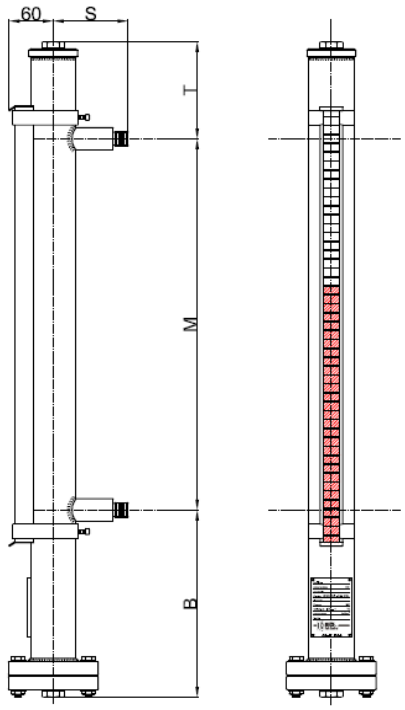

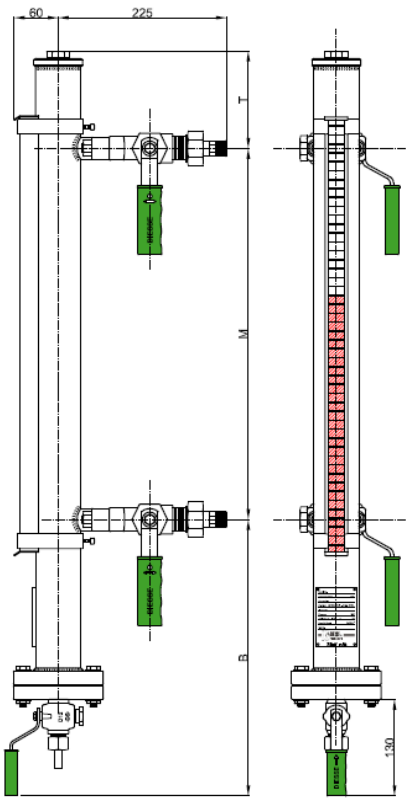

Technical data

Service conditions
Max Pressure: PN40
Max temperature: 200°C and 300°C

Standard execution:
Float: Max pressure 40 bar

Rollers: Max temperature 200°C
Temperature up to 300°C with ceramic rollers

Specific weight: ≥ 0,65 g/cm^3
< 0,65 g/cm^3 with special float

View
Standard: adjustable on 360° in the installation phase

Distance (Centre-to-centre)
On request, distances up to 5.600 mm in one sole piece (Fixed distance, not adjustable)
Option: On request distances over 5.600 mm (In several pieces)

Materials (Standard)

Chamber:	Stainless steel 316L (Ø 60,3 x 2,77 mm)
Float:	Stainless steel (Ø 50 mm for S.W. ≥ 1,0 g/cm^3)
	Titanium Grade 2 (Ø 50 mm for S.W. ≤ 1,0 g/cm^3)
Process connections:	Stainless steel (flanged, threaded pipes, butt weld pipes)
	With cocks: Carbon steel A105 cocks or Stainless steel 316L cocks
Rollers:	Brass with red and white epoxy paint, aluminium housing, glass cover (Temperature ≤ 200°C)
	Red and white ceramic, aluminium housing, glass cover (Temperature > 200°C up to 300°C)

Options: chamber and float in other materials; roller display housing with stainless steel cover

Gaskets
Standard: graphite/AISI 316 Options: PTFE/AISI 316

Process connections

Standard flanges:	UNI PN40 DN15-20-25	ANSI#300-600/RF DN ½" - ¾" - 1"
Standard threaded pipes:	BSP-M ½" - ¾" - 1"	NPT-M ½" - ¾" - 1"
	BSP-F ½" - ¾" - 1"	NPT-F ½" - ¾" - 1"
Standard butt weld pipes:	BW ½" - ¾" - 1"	SW ½" - ¾" - 1"

Options: further connections type or connections with cocks (see details at page 2.13 and 2.14)

Vent: Standard: threaded ½" with plug Options: On request, with flange or with cock (see details at page 2.13 and page 2.14)

Drain: Standard: threaded ½" with plug Options: On request, with flange or with cock (see details at page 2.13 and page 2.14)

Process connections with shut off cocks: (see details at page 2.13 and page 2.14)
Cocks type DS GR18: cylindrical plug type - Straight type - Quick 90° closing
Valves type DS SHV: globe type - Opening/Closing by handwheel

Dimensions
B = Distance depending on the specific weight of the fluid and weight of float
T = 130 mm (Standard); Option: on request
S = 100 mm (Standard); Option: on request

Accessories

Shut off cocks	(see details from page 2.13)
Drain cock	(see details from page 2.13)
Vent cock	(see details from page 2.13)
Calibrated scale	(see details from page 2.14)
Magnetic switches	(see details from page 2.15)
Level transmitter	(see details from page 2.23)
Contro unit	(see details from page 2.27)

Weights
Magnetic level gauge: Kg. 12,0 approx. (with centre-to-centre 1.000 mm and flanges DN20 PN16)
Cocks type DS GR18: Kg. 3,8 approx. (with flanges UNI DN20 PN40)
Valves type DS SHV: Kg. 8,8 approx. (with flanges UNI DN20 PN40)

Spare parts
For routine maintenance are not necessary spare parts.
For cocks and valves see from page 1.72 of the catalog relative to the glass level gauges.

MAGNETIC LEVEL GAUGES

PN63

Material: Stainless steel 316Ti or 316L

Centre-to-centre distance:
min. 150 to max. 5.600 mm
(other dimensions on request)

Pressure: -1…63 bar

Temperature: max 200°C
(with PBT rollers)
max 300°C
(with ceramic rollers)
(other on request)

Specific weight: ≥ 480 kg/m^3

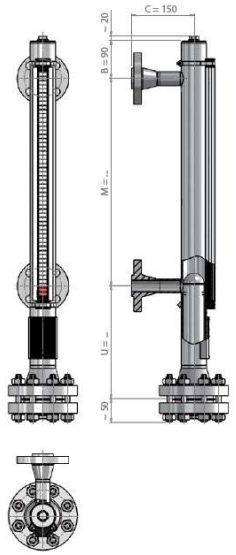

PN100

Material: Stainless steel 316Ti or 316L

Centre-to-centre distance:
min. 150 to max. 5.600 mm
(other dimensions on request)

Pressure: -1…100 bar

Temperature: max 200°C
(with PBT rollers)
max 300°C
(with ceramic rollers)
(other on request)

Specific weight: ≥ 390 kg/m^3

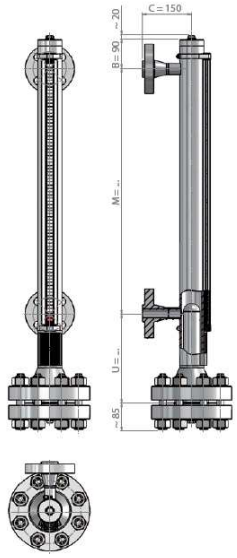

PN160

Material: Stainless steel 316Ti or 316L

Centre-to-centre distance:
min. 150 to max. 5.600 mm
(other dimensions on request)

Pressure: -1…160 bar

Temperature: max 200°C
(with PBT rollers)
max 300°C
(with ceramic rollers)
(other on request)

Specific weight: ≥ 480 kg/m^3

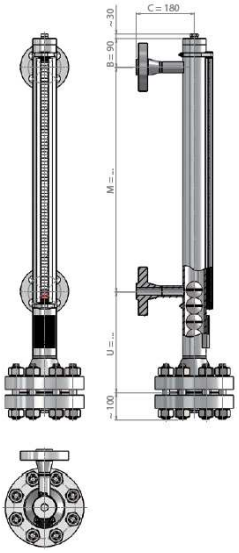

PN250 - PN400

Material: Stainless steel 316Ti or 316L

Centre-to-centre distance:
min. 150 to max. 5.600 mm
(other dimensions on request)

Pressure: -1…250 / 400 bar

Temperature: max 200°C
(with PBT rollers)
max 300°C
(with ceramic rollers)
(other on request)

Specific weight: ≥ 690 kg/m^3

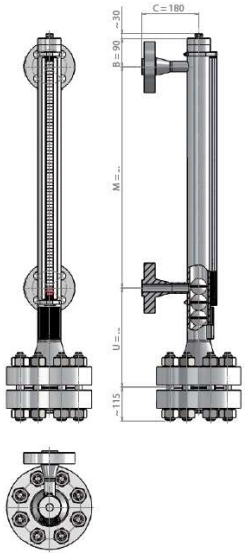

Liquid gas design

Material: Stainless steel 316Ti or 316L

Centre-to-centre distance:
min. 150 to max. 5.600 mm
(other dimensions on request)

Pressure: -1…40 bar

Temperature: max 200°C
(with PBT rollers)
max 300°C
(with ceramic rollers)
(other on request)

Specific weight: ≥ 460 kg/m^3

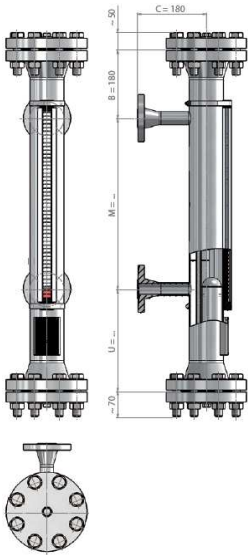

With steam tracing system

Material: Stainless steel 316Ti or 316L

Centre-to-centre distance:
min. 150 to max. 5.600 mm
(other dimensions on request)

Pressure: -1…40 bar

Temperature: max 200°C
(with PBT rollers)
max 300°C
(with ceramic rollers)
(other on request)

Specific weight: ≥ 460 kg/m^3

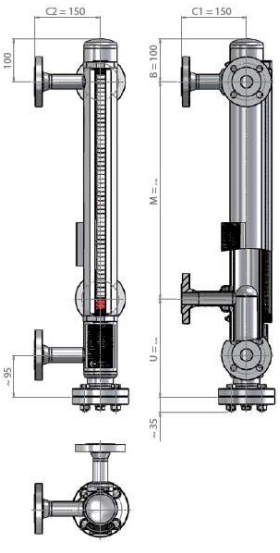

MAGNETIC LEVEL GAUGES

PVC

Material: PVC

Centre-to-centre distance:
min. 300 to max. 4.000 mm

Pressure: -1…4 bar

Temperature: -15°C to 40°C

Specific weight: ≥ 740 kg/m³

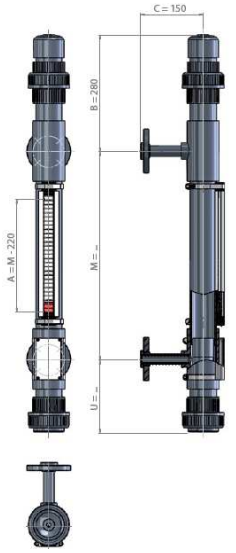

Polypropylene

Material: Polypropylene

Centre-to-centre distance:
min. 300 to max. 4.000 mm

Pressure: -1…4 bar

Temperature: -10°C to 60°C

Specific weight: ≥ 640 kg/m³

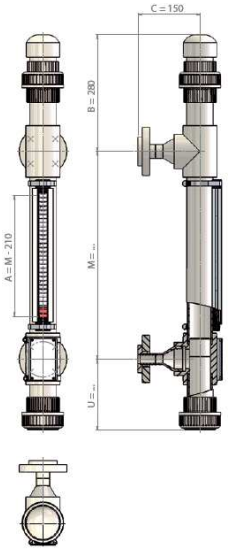

PVDF

Material: PVDF

Centre-to-centre distance:
min. 300 to max. 4.000 mm

Pressure: -1…4 bar

Temperature: -10°C to 80°C

Specific weight: ≥ 750 kg/m³

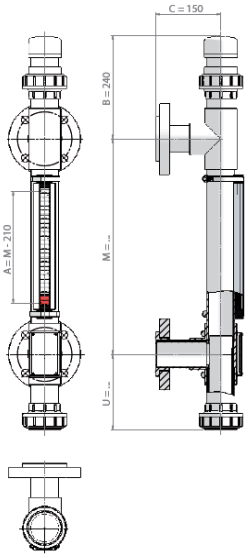

Stainless steel E-CTFE coated

Material: Stainless steel E-CTFE
coated

Centre-to-centre distance:
min. 150 to max. 3.000 mm

Pressure: -1…16 bar

Temperature: -30°C to 150°C
(other on request)

Specific weight: ≥ 690 kg/m³

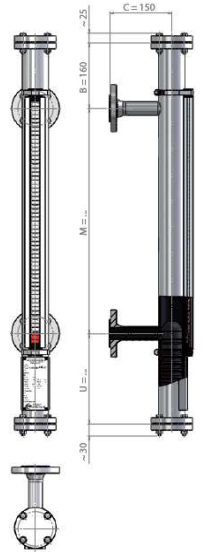

Stainless steel PFA coated

Material: Stainless steel PFA coated

Centre-to-centre distance:
min. 150 to max. 3.000 mm

Pressure: -1…16 bar

Temperature: -30°C to 200°C
(with PBT rollers)
max 250°C
(with ceramic rollers)
(other on request)

Specific weight: ≥ 715 kg/m³

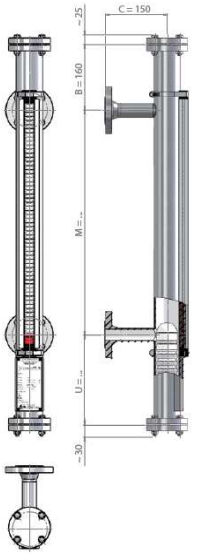

Top mounted

Material: Stainless steel 316Ti or 316L

Centre-to-centre distance:
min. 400 to max. 6.000 mm

Pressure: -1…16 bar

Temperature: -10°C to 200°C
(with PBT rollers)
max 300°C
(with ceramic rollers)
(other on request)

Specific weight: ≥ 400 kg/m³

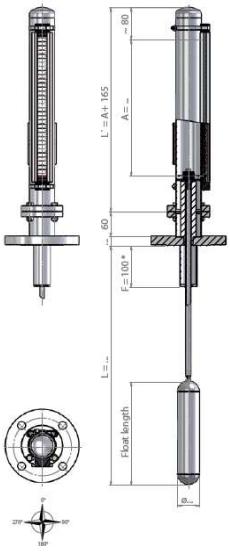

ACCESSORIES FOR MAGNETIC LEVEL GAUGES

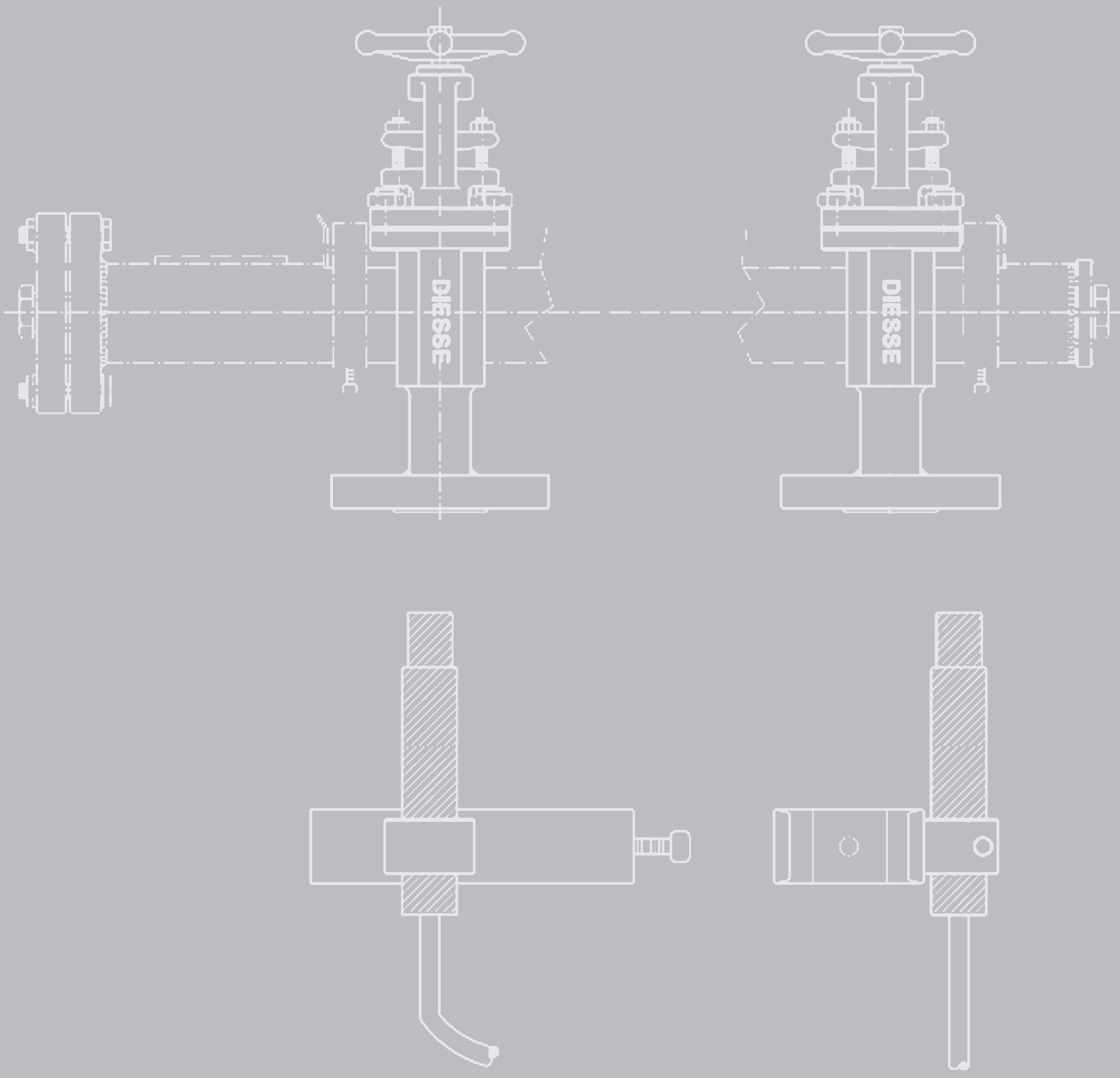

ACCESSORIES FOR MAGNETIC LEVEL GAUGES

The DIESSE magnetic level gauges can be equipped with shut-off cocks, drain cock and vent cock.
The shut-off cocks are connected to the main chamber by special T flanges with stainless steel AISI 316 gaskets.

SHUT OFF COCKS cylindrical plug type

Handling: lever operated with PP handle - Quick 90° closing

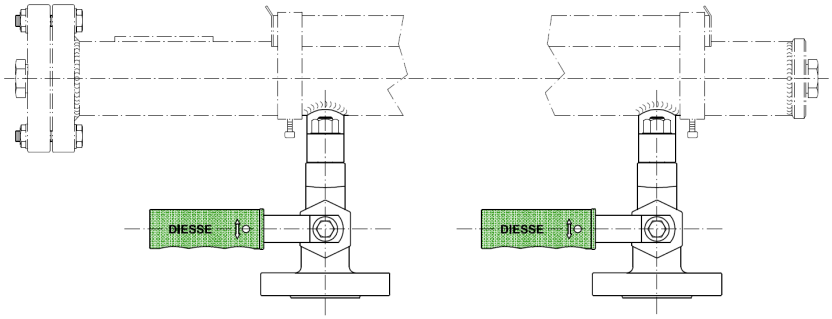

Code: GR18

DRAIN COCK cylindrical plug type

Handling: lever operated with PP handle - Quick 90° closing

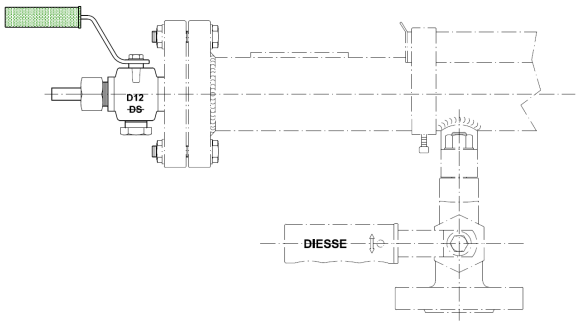

Code: D12

VENT COCK cylindrical plug type

Handling: lever operated with PP handle - Quick 90° closing

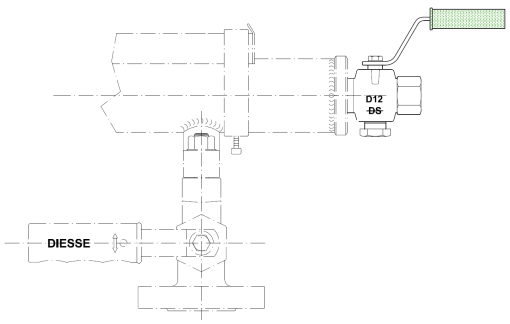

Code: D12S

ACCESSORIES FOR MAGNETIC LEVEL GAUGES

SHUT OFF VALVES globe type

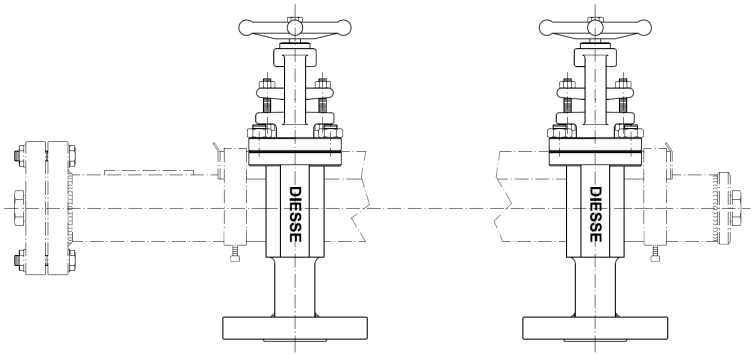

Code: SHV

DRAIN VALVE globe type

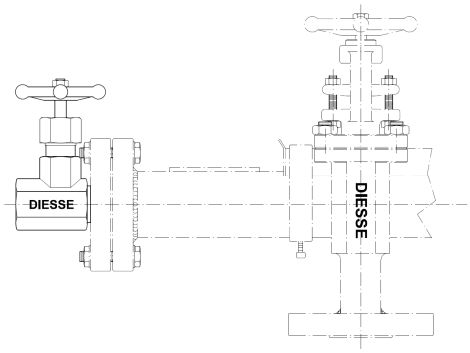

Code: DHV

VENT VALVE globe type

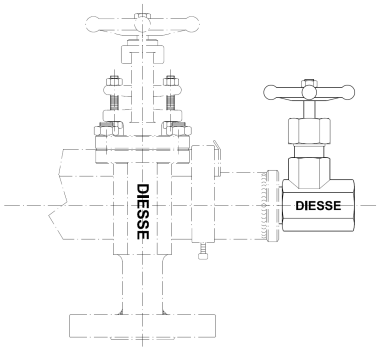

Code: DHVS

CALIBRATED SCALE

The calibrated scale (millimiters) is in stainless steel, the values are engraved and black coloured.
The standard indication correspond to the centre-to-centre distance of the level gauge.
On request other materials and graduations can be supplied.

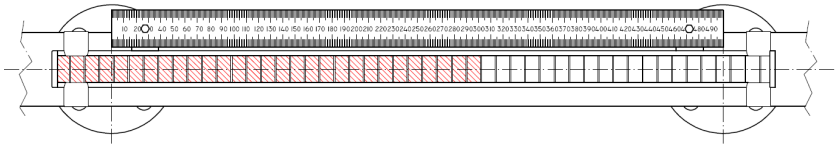

Code: VSG

ACCESSORIES FOR MAGNETIC LEVEL GAUGES

MAGNETIC SWITCH type TIM NSB 1240

Magnetic switches are used to monitor certain limits of the level.
The obtained binary signal can be forwarded to trigger alarms or other controls.

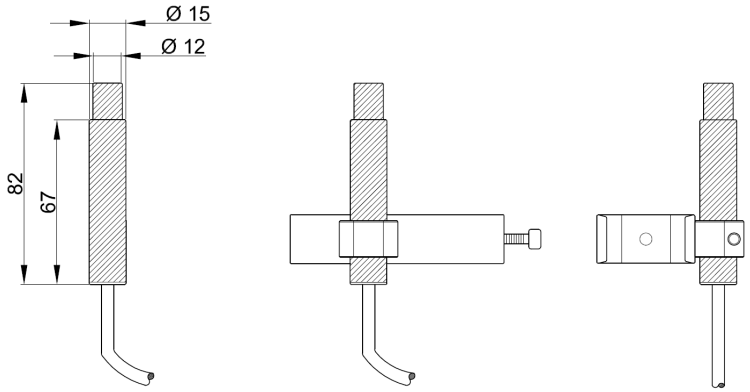

Code EBS: TIM NSB 1240

Technical data:

Type	**TIM NSB 1240**
Contact type	SPDT
Contact behaviour	Bistable
Working	Change-over
Contact material	Fe/Ni with Rodio
Max. power rating	60 VA / 30 W
Max. current rating	0,8 A
Max. voltage rating	220 V
Life time	100 million of controls
Working temperature	-25°C / +150°C
Housing protection	IP 67
Housing material	LAESTRA (SPS) G/40
Connection cable	Silicone 3 x 0,75 mmq; Length 3 m Nominal voltage 300 / 500 V Test voltage 2 KV According to table 5 of Standards CEI 20-29

Connection diagram:

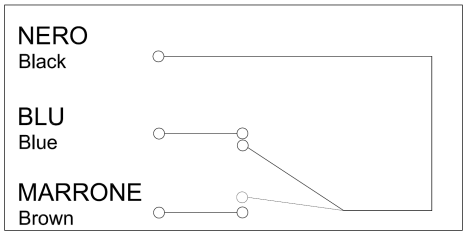

ACCESSORIES FOR MAGNETIC LEVEL GAUGES

MAGNETIC SWITCH

Type: BGU ... / BGU ... EXIAG

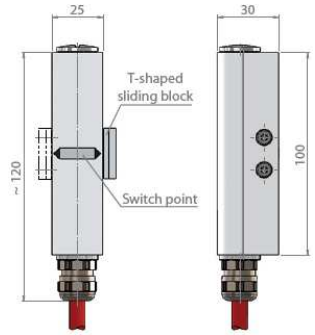

Type: BGU ... EXDG

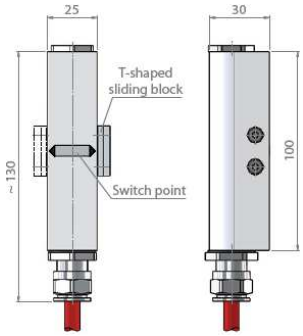

Code EBS: BGU ...
BGU ... EXIAG
BGU ... EXDG

Technical data:

Type	BGU ...	BGU ... EXIAG	BGU ... EXDG
Contact behaviour	Bistable	Bistable	Bistable
Working	Change-over	Change-over	Change-over
Switching capacity with NAMUR EN 60947 with resistor	230 V , 0.5 A, 40 VA	Exia 100 mA Exia NAMUR 60 mA	U_N 250 V, P_{SN} 50 W/VA, P_{FN} 700 mW U_N 15 V DC, I_N 60 mA U_N 250 V, I_N 100 mA
Options …/R22 …/N	Resistor 22 Ohm / 0,21 W NAMUR EN 60947	Resistor 22 Ohm / 0,21 W NAMUR EN 60947	Resistor 22 Ohm / 0,21 W NAMUR EN 60947
Working temperature with PVC cable with silicone cable with PUR cable with Radox cable	 -20 … 80°C -60 … 180°C -40 … 80°C -35 … 120°C	 -20 … 80°C -25 … 180°C -25 … 80°C -25 … 120°C	 -20 … 80°C -25 … 120°C -25 … 80°C -25 … 120°C
Ingress protection	IP 65	IP 65	IP 65
Housing material	Aluminium, anodized	Aluminium, anodized	Aluminium, anodized

Connection diagram:

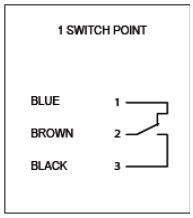

CHANGE OVER

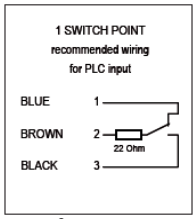

CHANGE OVER
WITH RESISTOR

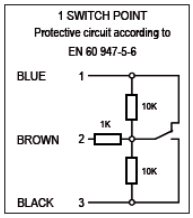

CHANGE OVER
WITH NAMUR EN 60947

Approvals / Certificates:

ATEX*

II 2G	Ex ia IIC T6 - T1	II 2G	Ex d IIC T6 - T4		
II 2D	Ex tD A21 IP6* T80°C T300°C	II 2D	Ex tD A21 c IP6* T80°C - T120°C		
Liquid temperature Ex ia max. 180°C / Ex d max. 120°C					
Type of protection intrinsic safety Ex ia IIC switch bzw. temperature switch		I_i	≤ 100 mA		
Type of protection intrinsic safety Ex ia IIC temperature probe		U_i	≤ 28 V	I_i ≤ 100 mA	P_i ≤ 700 mW
Type of protection intrinsic safety Ex ia IIC with option/N (NAMUR EN 60947)		U_i	≤ 15 VDC	I_i ≤ 60 mA	
Type of protection "moulding"		U_N	≤ 250 VDC/AC	P_{SN} ≤ 50 W/VA	P_{FN} ≤ 700 mW
Type of protection "moulding" with option/N (NAMUR EN 60947)		U_N	≤ 15 VDC	I_N ≤ 60 mA	
Type of protection "moulding" with option/R22 (resistor)		U_N	≤ 250 VDC/AC	I_N ≤ 100 mA	

* = The approval is dependent on the equipment combination

ACCESSORIES FOR MAGNETIC LEVEL GAUGES

MAGNETIC SWITCH

Type: BGUALE ... / BGUALE ... EXIAG

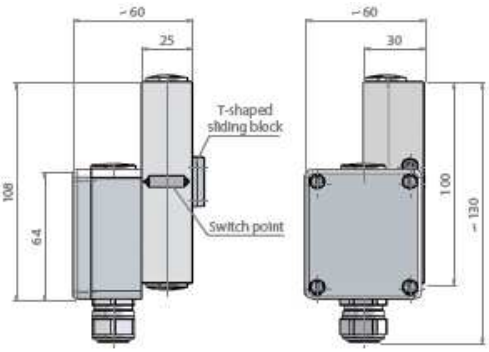

Type: BGUASQ ... / BGUASQ ... EXIAG

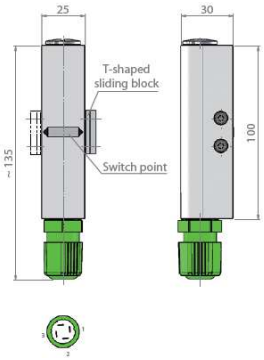

Code EBS: BGUALE ...
BGUALE ... EXIAG
BGUASQ ...
BGUASQ ... EXIAG

Technical data:

Type	BGUALE ...	BGUALE ... EXIAG	BGUASQ ...	BGUASQ ... EXIAG
Contact behaviour	Bistable	Bistable	Bistable	Bistable
Working	Change-over	Change-over	Change-over	Change-over
Switching capacity with NAMUR EN 60947	230 V , 0.5 A, 40 VA	Exia 100 mA Exia NAMUR 60 mA	230 V , 0.5 A, 40 VA	Exia 100 mA Exia NAMUR 60 mA
Options …/R22 …/N	Resistor 22 Ohm / 0,21 W NAMUR EN 60947	Resistor 22 Ohm / 0,21 W NAMUR EN 60947	Resistor 22 Ohm / 0,21 W NAMUR EN 60947	Resistor 22 Ohm / 0,21 W NAMUR EN 60947
Working temperature	-40 … 130°C	-25 … 130°C	-25 … 85°C	-25 … 85°C
Ingress protection	IP 65	IP 65	IP 65	IP 65
Housing material	Aluminium, anodized	Aluminium, anodized	Aluminium, anodized	Aluminium, anodized
Cable entry	M20 x 1.5	M20 x 1.5		

Connection diagram:

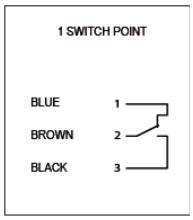

CHANGE OVER

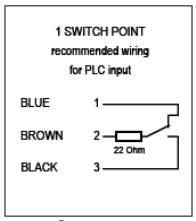

CHANGE OVER
WITH RESISTOR

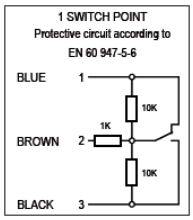

CHANGE OVER
WITH NAMUR EN 60947

Approvals / Certificates:

ATEX*

II 2G	Ex ia IIC T6 - T1	II 2G	Ex d IIC T6 - T4		
II 2D	Ex tD A21 IP6* T80°C T300°C	II 2D	Ex tD A21 c IP6* T80°C - T120°C		
Liquid temperature Ex ia max. 180°C / Ex d max. 120°C					
Type of protection intrinsic safety Ex ia IIC switch bzw. temperature switch			I_i ≤ 100 mA		
Type of protection intrinsic safety Ex ia IIC temperature probe			U_i ≤ 28 V	I_i ≤ 100 mA	P_i ≤ 700 mW
Type of protection intrinsic safety Ex ia IIC with option/N (NAMUR EN 60947)			U_i ≤ 15 VDC	I_i ≤ 60 mA	
Type of protection "moulding"			U_N ≤ 250 VDC/AC	P_{SN} ≤ 50 W/VA	P_{FN} ≤ 700 mW
Type of protection "moulding" with option/N (NAMUR EN 60947)			U_N ≤ 15 VDC	I_N ≤ 60 mA	
Type of protection "moulding" with option/R22 (resistor)			U_N ≤ 250 VDC/AC	I_N ≤ 100 mA	

* = The approval is dependent on the equipment combination

ACCESSORIES FOR MAGNETIC LEVEL GAUGES

MAGNETIC SWITCH

Type: BGUASMA … / BGUASMA … EXIAG

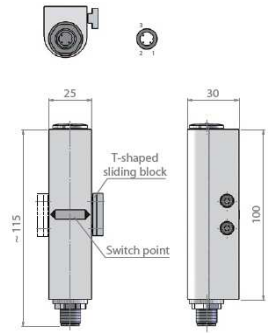

Type: RU60 … / RU60 ... EXIAG

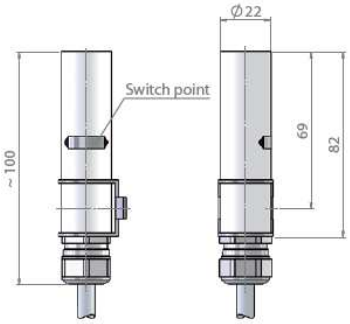

Code EBS: RU60 …
RU60 … EXIAG

Technical data:

Type	BGUASMA …	BGUASMA … EXIAG	RU60 …	RU60 … EXIAG
Contact behaviour	Bistable	Bistable	Bistable	Bistable
Working	Change-over	Change-over	Change-over	Change-over
Switching capacity with NAMUR EN 60947	230 V, 0.5 A, 40 VA	Exia 100 mA Exia NAMUR 60 mA	230 V , 0.5 A, 40 VA	Exia 100 mA Exia NAMUR 60 mA
Options …/R22 …/N	Resistor 22 Ohm / 0,21 W NAMUR EN 60947	Resistor 22 Ohm / 0,21 W NAMUR EN 60947	Resistor 22 Ohm / 0,21 W NAMUR EN 60947	Resistor 22 Ohm / 0,21 W NAMUR EN 60947
Working temperature with PVC cable with silicone cable with PUR cable with Radox cable	-25 … 90°C	-25 … 90°C	 -20 … 80°C -40 … 180°C -40 … 80°C -35 … 120°C	 -20 … 80°C -40 … 180°C -40 … 80°C -35 … 120°C
Ingress protection	IP 65	IP 65	IP 65	IP 65
Housing material	Aluminium, anodized	Aluminium, anodized	Aluminium, anodized	Aluminium, anodized
Connector	M12	M12		

Connection diagram:

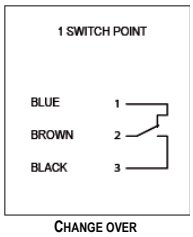

CHANGE OVER

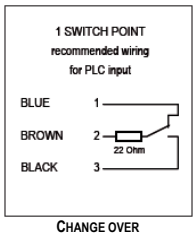

CHANGE OVER
WITH RESISTOR

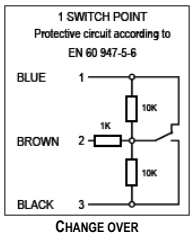

CHANGE OVER
WITH NAMUR EN 60947

Approvals / Certificates:

ATEX*

II 2G	Ex ia IIC T6 - T1	II 2G	Ex d IIC T6 - T4		
II 2D	Ex tD A21 IP6* T80°C T300°C	II 2D	Ex tD A21 c IP6* T80°C - T120°C		
Liquid temperature Ex ia max. 180°C / Ex d max. 120°C					
Type of protection intrinsic safety Ex ia IIC switch bzw. temperature switch			I_i ≤ 100 mA		
Type of protection intrinsic safety Ex ia IIC temperature probe			U_i ≤ 28 V	I_i ≤ 100 mA	P_i ≤ 700 mW
Type of protection intrinsic safety Ex ia IIC with option/N (NAMUR EN 60947)			U_i ≤ 15 VDC	I_i ≤ 60 mA	
Type of protection "moulding"			U_N ≤ 250 VDC/AC	P_{SN} ≤ 50 W/VA	P_{FN} ≤ 700 mW
Type of protection "moulding" with option/N (NAMUR EN 60947)			U_N ≤ 15 VDC	I_N ≤ 60 mA	
Type of protection "moulding" with option/R22 (resistor)			U_N ≤ 250 VDC/AC	I_N ≤ 100 mA	

* = The approval is dependent on the equipment combination

DIESSE S.r.l. Fluid Control

ACCESSORIES FOR MAGNETIC LEVEL GAUGES

MAGNETIC SWITCH

Type: RUV60 … / RUV60 ... EXIAG

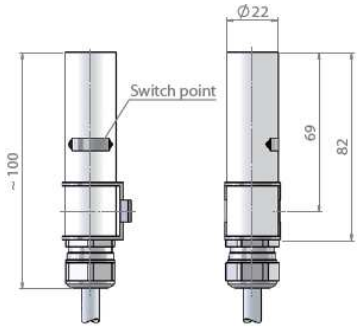

Type: RUVD60 … EXDG

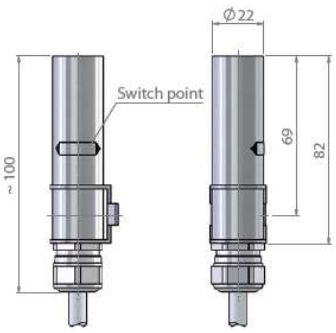

Code EBS: RUV60 …
RUV60 … EXIAG
RUVD60 … EXDG

Technical data:

Type	RUV60 …	RUV60 … EXIAG	RUVD60 … EXDG
Contact behaviour	Bistable	Bistable	Bistable
Working	Change-over	Change-over	Change-over
Switching capacity with NAMUR EN 60947 with resistor	230 V , 0.5 A, 40 VA	Exia 100 mA Exia NAMUR 60 mA	U_N 250 V, P_{SN} 50 W/VA, P_{FN} 700 mW U_N 15 V DC, I_N 60 mA U_N 250 V, I_N 100 mA
Options …/R22 …/N	Resistor 22 Ohm / 0,21 W NAMUR EN 60947	Resistor 22 Ohm / 0,21 W NAMUR EN 60947	Resistor 22 Ohm / 0,21 W NAMUR EN 60947
Working temperature with PVC cable with silicone cable with PUR cable with Radox cable	 -20 … 80°C -40 … 180°C -40 … 80°C -35 … 120°C	 -20 … 80°C -40 … 180°C -40 … 80°C -35 … 120°C	 -20 … 80°C -40 … 120°C -40 … 80°C -35 … 120°C
Ingress protection	IP 68	IP 68	IP 68
Housing material	Stainless steel	Stainless steel	Stainless steel

Connection diagram:

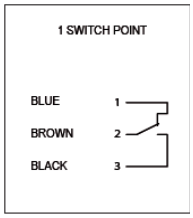

CHANGE OVER

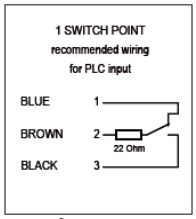

CHANGE OVER
WITH RESISTOR

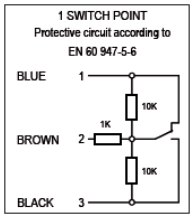

CHANGE OVER
WITH NAMUR EN 60947

Approvals / Certificates:

ATEX*

II 2G	Ex ia IIC T6 - T1	II 2G	Ex d IIC T6 - T4
II 2D	Ex tD A21 IP6* T80°C T300°C	II 2D	Ex tD A21 c IP6* T80°C - T120°C

Liquid temperature Ex ia max. 180°C / Ex d max. 120°C

Type of protection intrinsic safety Ex ia IIC switch bzw. temperature switch	I_i ≤ 100 mA		
Type of protection intrinsic safety Ex ia IIC temperature probe	U_i ≤ 28 V	I_i ≤ 100 mA	P_i ≤ 700 mW
Type of protection intrinsic safety Ex ia IIC with option/N (NAMUR EN 60947)	U_i ≤ 15 VDC	I_i ≤ 60 mA	
Type of protection “moulding”	U_N ≤ 250 VDC/AC	P_{SN} ≤ 50 W/VA	P_{FN} ≤ 700 mW
Type of protection “moulding” with option/N (NAMUR EN 60947)	U_N ≤ 15 VDC	I_N ≤ 60 mA	
Type of protection “moulding” with option/R22 (resistor)	U_N ≤ 250 VDC/AC	I_N ≤ 100 mA	

* = The approval is dependent on the equipment combination

DIESSE S.r.l.
Fluid Control

ACCESSORIES FOR MAGNETIC LEVEL GAUGES

MAGNETIC SWITCH

Type: ALFU ... / ALFU ... EXIAG

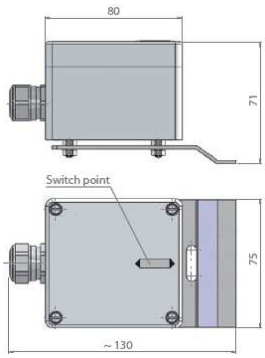

Type: ALFI ... / ALFI ... EXIAG

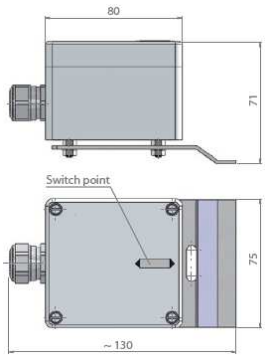

Code EBS: ALFU ...
ALFU ... EXIAG
ALFI ...
ALFI ... EXIAG

Technical data:

Type	ALFU ...	ALFU ... EXIAG	ALFI ...	ALFI ... EXIAG
Contact behaviour	Bistable	Bistable	Bistable	Bistable
Working	Change-over	Change-over	NAMUR normally closed	NAMUR normally closed
Switching capacity with NAMUR EN 60947	230 V , 0.5 A, 40 VA	Exia 100 mA Exia NAMUR 60 mA		
Power supply			5.0 ... 25 V DC	5.0 ... 25 V DC
Nominal voltage			8.0 V DC (R ~ 1Ohm)	8.0 V DC (R ~ 1Ohm)
Self inductance			100 mH	100 mH
Self capacitance			30 nF	30 nF
Intrinsic safety data			U_i 16 V DC; U_i 25 mA; P_i 34 mW	U_i 16 V DC; U_i 25 mA; P_i 34 mW
Options …/R22 …/N	Resistor 22 Ohm / 0,21 W NAMUR EN 60947	Resistor 22 Ohm / 0,21 W NAMUR EN 60947		
Working temperature with 22 Ohm resistor with NAMUR EN 60947	-40 ... 300°C -40 ... 220°C -40 ... 220°C	-40 ... 300°C -40 ... 220°C -40 ... 220°C	-40 ... 100°C	-40 ... 73°C
Ingress protection	IP 65	IP 65	IP 65	IP 65
Housing material	Aluminium, anodized	Aluminium, anodized	Aluminium coated RAL 9006	Aluminium coated RAL 9006
Cable entry	M20 x 1.5	M20 x 1.5	M20 x 1.5	M20 x 1.5

Connection diagram:

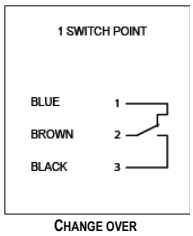

CHANGE OVER

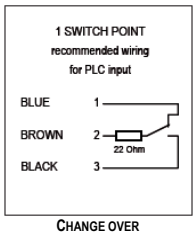

CHANGE OVER
WITH RESISTOR

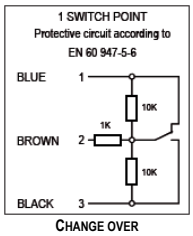

CHANGE OVER
WITH NAMUR EN 60947

Approvals / Certificates:

ATEX*
II 2G Ex ia IIC T6 - T1 II 2G Ex d IIC T6 - T4
II 2D Ex tD A21 IP6* T80°C T300°C II 2D Ex tD A21 c IP6* T80°C - T120°C
Liquid temperature Ex ia max. 180°C / Ex d max. 120°C

Type of protection intrinsic safety Ex ia IIC switch bzw. temperature switch	I_i ≤ 100 mA		
Type of protection intrinsic safety Ex ia IIC temperature probe	U_i ≤ 28 V	I_i ≤ 100 mA	P_i ≤ 700 mW
Type of protection intrinsic safety Ex ia IIC with option/N (NAMUR EN 60947)	U_i ≤ 15 VDC	I_i ≤ 60 mA	
Type of protection "moulding"	U_N ≤ 250 VDC/AC	P_{SN} ≤ 50 W/VA	P_{FN} ≤ 700 mW
Type of protection "moulding" with option/N (NAMUR EN 60947)	U_N ≤ 15 VDC	I_N ≤ 60 mA	
Type of protection "moulding" with option/R22 (resistor)	U_N ≤ 250 VDC/AC	I_N ≤ 100 mA	

* = The approval is dependent on the equipment combination

ACCESSORIES FOR MAGNETIC LEVEL GAUGES

MAGNETIC SWITCH

Type: ALEU ... / ALEU ... EXIAG

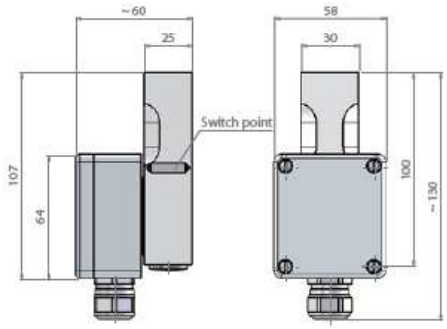

Type: APAVU ... / APBVU ... EXIAG

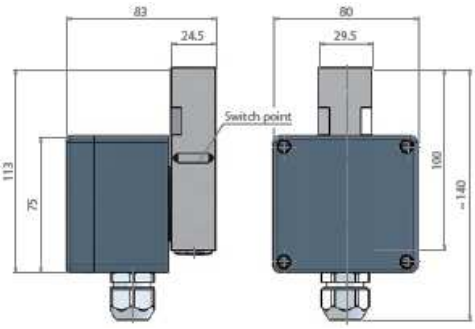

Code EBS: ALEU ...
ALEU ... EXIAG
APAVU ...
APBVU ... EXIAG

Technical data:

Type	ALEU ...	ALEU ... EXIAG	APAVU ...	APBVU ... EXIAG
Contact behaviour	Bistable	Bistable	Bistable	Bistable
Working	Change-over	Change-over	Change-over	Change-over
Switching capacity with NAMUR EN 60947	230 V , 0.5 A, 40 VA	Exia 100 mA Exia NAMUR 60 mA	230 V , 0.5 A, 40 VA	Exia 100 mA Exia NAMUR 60 mA
Options …/R22 …/N	Resistor 22 Ohm / 0,21 W NAMUR EN 60947	Resistor 22 Ohm / 0,21 W NAMUR EN 60947	Resistor 22 Ohm / 0,21 W NAMUR EN 60947	Resistor 22 Ohm / 0,21 W NAMUR EN 60947
Working temperature	-40 ... 130°C	-40 ... 130°C	-10 ... 100°C	-10 ... 100°C
Ingress protection	IP 65	IP 65	IP 65	IP 65
Housing material	Aluminium, anodized	Aluminium, anodized	Polyester	Stainless steel
Cable entry	M20 x 1.5	M20 x 1.5	M20 x 1.5	M20 x 1.5

Connection diagram:

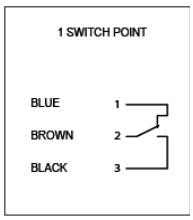

CHANGE OVER

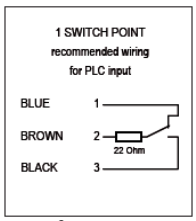

CHANGE OVER
WITH RESISTOR

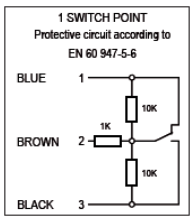

CHANGE OVER
WITH NAMUR EN 60947

Approvals / Certificates:

ATEX*
II 2G Ex ia IIC T6 - T1 II 2G Ex d IIC T6 - T4
II 2D Ex tD A21 IP6* T80°C T300°C II 2D Ex tD A21 c IP6* T80°C - T120°C
Liquid temperature Ex ia max. 180°C / Ex d max. 120°C

Type of protection intrinsic safety Ex ia IIC switch bzw. temperature switch	I_i ≤ 100 mA		
Type of protection intrinsic safety Ex ia IIC temperature probe	U_i ≤ 28 V	I_i ≤ 100 mA	P_i ≤ 700 mW
Type of protection intrinsic safety Ex ia IIC with option/N (NAMUR EN 60947)	U_i ≤ 15 VDC	I_i ≤ 60 mA	
Type of protection "moulding"	U_N ≤ 250 VDC/AC	P_{SN} ≤ 50 W/VA	P_{FN} ≤ 700 mW
Type of protection "moulding" with option/N (NAMUR EN 60947)	U_N ≤ 15 VDC	I_N ≤ 60 mA	
Type of protection "moulding" with option/R22 (resistor)	U_N ≤ 250 VDC/AC	I_N ≤ 100 mA	

* = The approval is dependent on the equipment combination

ACCESSORIES FOR MAGNETIC LEVEL GAUGES

MAGNETIC SWITCH

Type: ALDAU ... EXDG

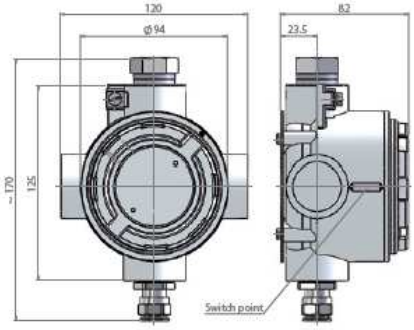

Code EBS: ALDAU ... EXDG

Technical data:

Type	ALDAU ... EXDG
Contact behaviour	Bistable
Working	Change-over
Switching capacity with NAMUR EN 60947 with resistor	U_N 250 V, P_{SN} 50 W/VA, P_{FN} 700 mW U_N 15 V DC, I_N 60 mA U_N 250 V, I_N 100 mA
Options …/R22 …/N	Resistor 22 Ohm / 0,21 W NAMUR EN 60947
Working temperature	-40 ... 100°C
Ingress protection	IP 65
Housing material	Aluminium coated RAL 9006
Cable entry	M20 x 1.5

Connection diagram:

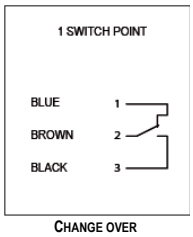

CHANGE OVER

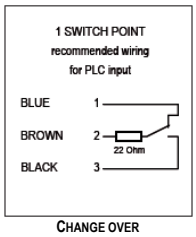

CHANGE OVER
WITH RESISTOR

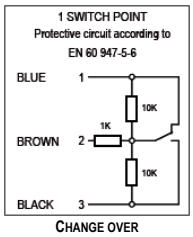

CHANGE OVER
WITH NAMUR EN 60947

Approvals / Certificates:

ATEX*

II 2G	Ex ia IIC T6 - T1	II 2G	Ex d IIC T6 - T4
II 2D	Ex tD A21 IP6* T80°C T300°C	II 2D	Ex tD A21 c IP6* T80°C - T120°C

Liquid temperature Ex ia max. 180°C / Ex d max. 120°C

Type of protection intrinsic safety Ex ia IIC switch bzw. temperature switch	I_i ≤ 100 mA		
Type of protection intrinsic safety Ex ia IIC temperature probe	U_i ≤ 28 V	I_i ≤ 100 mA	P_i ≤ 700 mW
Type of protection intrinsic safety Ex ia IIC with option/N (NAMUR EN 60947)	U_i ≤ 15 VDC	I_i ≤ 60 mA	
Type of protection "moulding"	U_N ≤ 250 VDC/AC	P_{SN} ≤ 50 W/VA	P_{FN} ≤ 700 mW
Type of protection "moulding" with option/N (NAMUR EN 60947)	U_N ≤ 15 VDC	I_N ≤ 60 mA	
Type of protection "moulding" with option/R22 (resistor)	U_N ≤ 250 VDC/AC	I_N ≤ 100 mA	

* = The approval is dependent on the equipment combination

ACCESSORIES FOR MAGNETIC LEVEL GAUGES

LEVEL TRANSMITTER

Type: ALF …

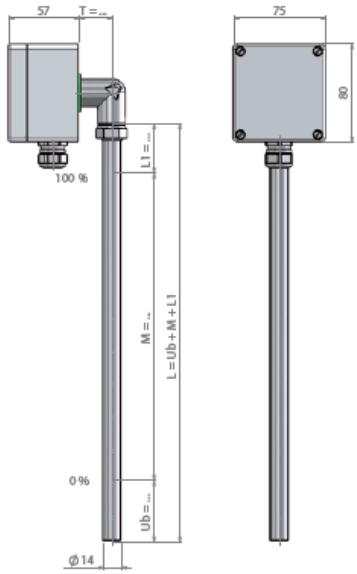

Type: ALDA … EXDG …

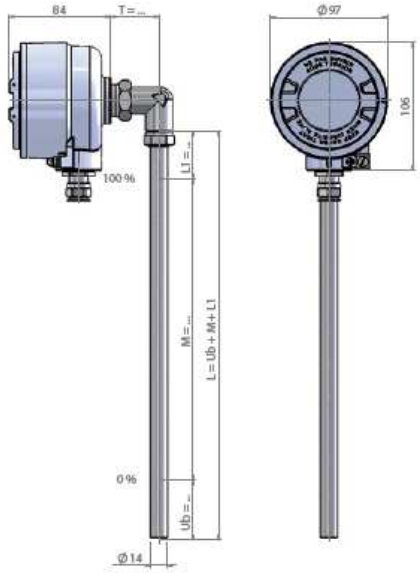

Code LTM: ALF …
ALDA ... EXDG ...

Technical data:

Type	**ALF …**	**ALDA … EXDG …**
Contact type	Reed chain	Reed chain
Housing material	Aluminium, anodized	Aluminium coated RAL 9006
Cable entry	M20 x 1.5	M20 x 1.5
Ingress protection	IP 65	IP 68
Sensor tube	Stainless steel	Stainless steel
Minimum measures (Fluid ≤ 200°C)	T: 27 mm ; L1: 40 mm ; Ub: 50 mm	T: 50 mm ; L1: 40 mm ; Ub: 50 mm
Minimum measures (Fluid > 200°C)	T: 100 mm; L1: 40 mm; Ub: 50 mm	T: 100 mm; L1: 40 mm; Ub: 50 mm
Accuracy	5 / 10 / 15 mm	5 / 10 / 15 mm
Working temperature code K5 / K10 / K15 code K5HTF / K10HTF / K15HTF code K5HT / K10HT / K15HT	 -30 … 130°C -30 … 200°C -40 … 250°C	 -30 … 120°C -30 … 120°C -40 … 120°C
Option control unit (see page 2.26)	Programmable Hart programmable / SIL2 Profibus PA Fondation Fieldbus	Programmable Hart programmable / SIL2 Profibus PA Fondation Fieldbus

Connection diagram:

See details at page 2.26

Approvals / Certificates:

See details at page 2.26

ACCESSORIES FOR MAGNETIC LEVEL GAUGES

LEVEL TRANSMITTER

Type: DAALA …

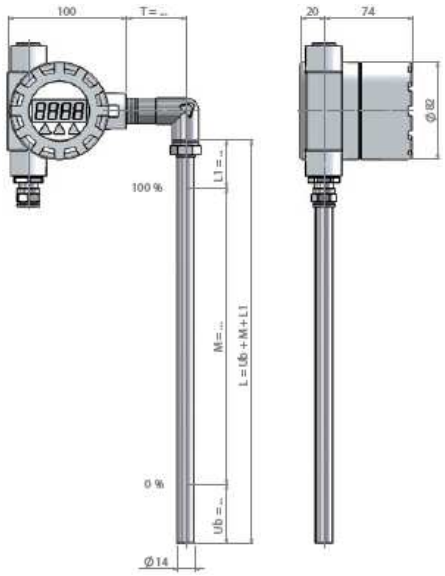

Type: DAAVDA … EXIADG …

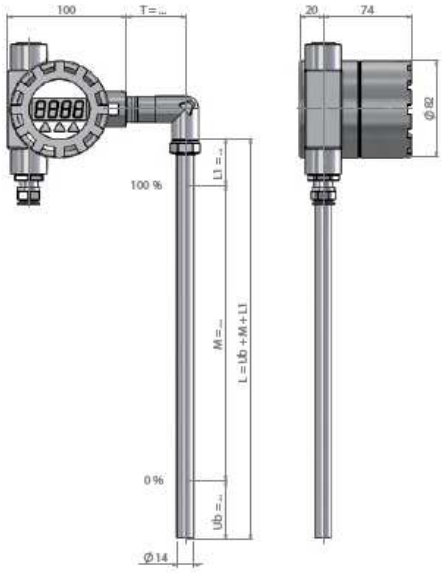

Code LTM: DAALA …
DAAVDA ... EXIADG ...

Technical data:

Type	**DAALA …**	**DAAVDA … EXIADG …**
Contact type	Reed chain	Reed chain
Housing material	Aluminium, anodized	Stainless steel electropolished
Cable entry	M20 x 1.5	M20 x 1.5
Ingress protection	IP 65	IP 68
Sensor tube	Stainless steel	Stainless steel
Display	4-digit LED display in red / Free scaling	4-digit LED display in red / Free scaling
Current input	4 … 20 mA	4 … 20 mA
Minimum measures (Fluid ≤ 200°C)	T: 50 mm ; L1: 40 mm ; Ub: 50 mm	T: 50 mm ; L1: 40 mm ; Ub: 50 mm
Minimum measures (Fluid > 200°C)	T: 100 mm; L1: 40 mm; Ub: 50 mm	T: 100 mm; L1: 40 mm; Ub: 50 mm
Accuracy	5 / 10 / 15 mm	5 / 10 / 15 mm
Working temperature code K5 / K10 / K15 code K5HTF / K10HTF / K15HTF code K5HT / K10HT / K15HT	 -30 … 130°C -30 … 200°C -40 … 250°C	 -30 … 130°C (Exd 120°C) -30 … 180°C (Exd 120°C) -40 … 180°C (Exd 120°C)
Option control unit (see page 2.26)	Programmable Hart programmable / SIL2 Profibus PA Fondation Fieldbus	Programmable Hart programmable / SIL2 Profibus PA Fondation Fieldbus

Connection diagram:

See details at page 2.26

Approvals / Certificates:

See details at page 2.26

ACCESSORIES FOR MAGNETIC LEVEL GAUGES

LEVEL TRANSMITTER

Type: AVA ...

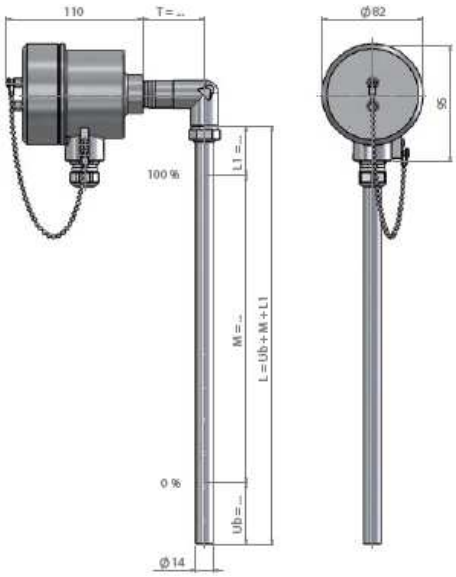

Type: AVM ...

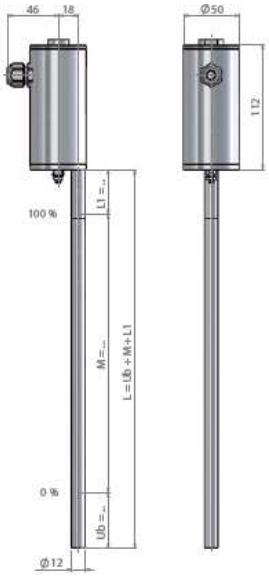

Code LTM: AVA ...
AVM ...

Technical data:

Type	**AVA ...**	**AVM ...**
Contact type	Reed chain	Magnetostrictive
Housing material	Stainless steel A4 (S.S. 316)	Stainless steel A4 (S.S. 316)
Cable entry	M20 x 1.5	M16 x 1.5
Ingress protection	IP 67	IP 68
Sensor tube	Stainless steel	Stainless steel
Minimum measures (Fluid ≤ 200°C)	T: 50 mm ; L1: 40 mm ; Ub: 50 mm	L1: 40 mm; Ub: 50 mm
Minimum measures (Fluid > 200°C)	T: 100 mm; L1: 40 mm; Ub: 50 mm	L1: 40 mm; Ub: 50 mm
Accuracy	5 / 10 / 15 mm	0,2 mm
Working temperature code K5 / K10 / K15 code K5HTF / K10HTF / K15HTF code K5HT / K10HT / K15HT	 -30 ... 130°C -30 ... 200°C -40 ... 250°C	 code K1: -40 ... 125°C code K1HT: -40 ... 250°C code K1HHT: -40 ... 450°C
Option control unit (see page 2.26)	Programmable Hart programmable / SIL2 Profibus PA Fondation Fieldbus	Programmable 4 ... 20 mA, 10 ... 30 V DC Hart programmable 4 ... 20 mA, 10 ... 30 V DC

Connection diagram:

See details at page 2.26

Approvals / Certificates:

See details at page 2.26

ACCESSORIES FOR MAGNETIC LEVEL GAUGES

Connection diagram:

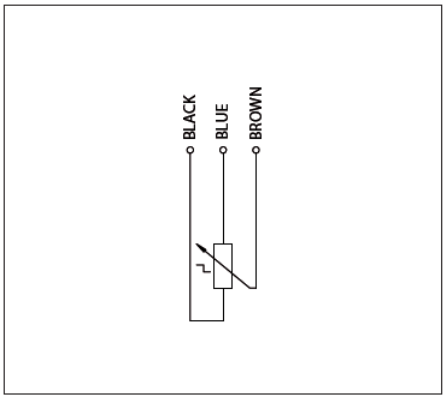

WITHOUT CONTROL UNIT

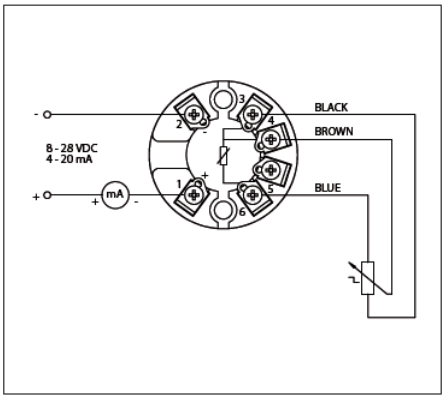

CONTROL UNIT TP5343 ...

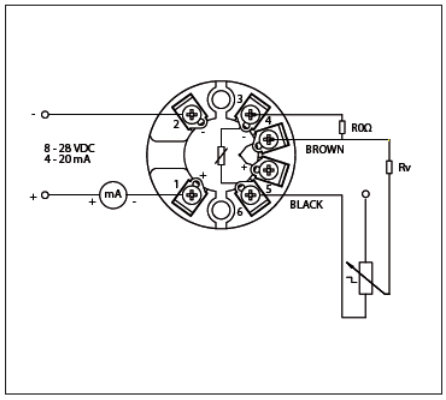

CONTROL UNIT TD5335 ...

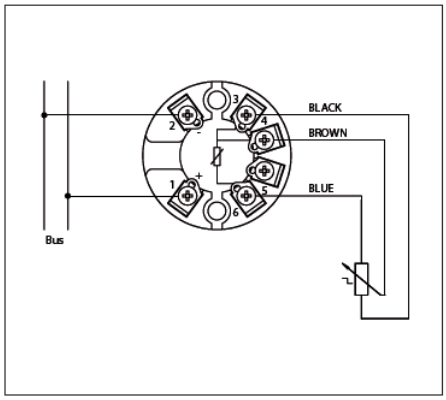

CONTROL UNIT TP5350 ...

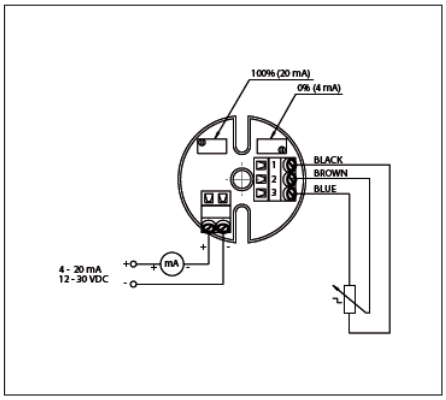

CONTROL UNIT XT42SI EX

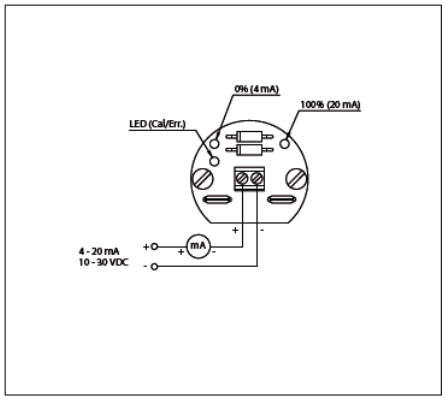

CONTROL UNIT MAGNETOSTRICTIVE

Approvals / Certificates:

ATEX - Approval for accuracy K5 ... / K10 ... / K15 ... *

II 1/2G Ex ia c IIC T6 - T4	II 1/2G Ex ia c IIC T6 - T3 bzw. Ex d ia c IIC T6 - T4	II 2G Ex d c IIC T6 - T4
II 1/2G Ex d ia c IIC T6 - T4	II 2D Ex tD A21 c IP6* T80°C - T190°C bzw. T125	

Liquid temperature Ex ia max. 180°C / Ex d max. 120°C

Type of protection intrinsic safety Ex ia IIC switch bzw. temperature switch	I_i ≤ 100 mA		
Type of protection intrinsic safety Ex ia IIC temperature probe	U_i ≤ 28 V	I_i ≤ 100 mA	P_i ≤ 700 mW
Type of protection intrinsic safety Ex ia IIC with option/N (NAMUR EN 60947)	U_i ≤ 15 VDC	I_i ≤ 60 mA	
Type of protection "moulding"	U_N ≤ 250 VDC/AC	P_{SN} ≤ 50 W/VA	P_{FN} ≤ 700 mW
Type of protection "moulding" with option/N (NAMUR EN 60947)	U_N ≤ 15 VDC	I_N ≤ 60 mA	
Type of protection "moulding" with option/R22 (resistor)	U_N ≤ 250 VDC/AC	I_N ≤ 100 mA	

ATEX - Approval for accuracy K1 ... *

II 1/2G Ex ia c IIC T6 - T2	II 1G Ex ia IIC T4 - T2	
II 1/2G Ex ia IIC T6 - T2	II 2G Ex d IIC T4	

Type of protection intrinsic safety Ex ia IIC	U_i ≤ 30 V	I_i ≤ 200 mA	P_i ≤ 1000 mW
Temperature class	T6	T5	T4 – T2
Ambient temperature (T_a)	-20°C ... 40°C	-20°C ... 55°C	-20°C ... 85°C
Fluid temperature (T_F)	-20°C ... 60°C	-20°C ... 60°C	-20°C ... 60°C

* = The approval is dependent on the equipment combination

ACCESSORIES FOR MAGNETIC LEVEL GAUGES

CONTROL UNIT

Type: MULD2 … / MULE2 …

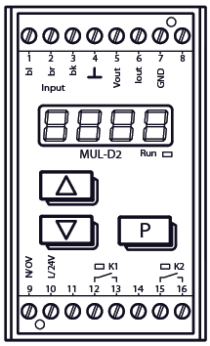

Type: MULD4 … / MULE4 …

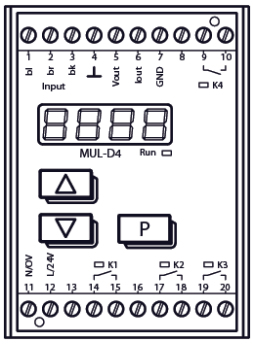

Code: MULD2 …
MULD4 …
MULE2 …
MULE4 …

Technical data:

Type	**MULD2 … / MULE2 …**	**MULD4 … / MULE4 …**
Power supply	MULD21 / MULE21 18 … 36 V DC MULD22 / MULE22 115 V AC MULD23 / MULE23 230 V AC	MULD41 / MULE41 18 … 36 V DC MULD42 / MULE42 115 V AC MULD43 / MULE43 230 V AC
Current input	-	-
Current output	0 … 20 mA / 4 … 20 mA	0 … 20 mA / 4 … 20 mA
Error alarm	Yes (only for 4 … 20 mA)	Yes (only for 4 … 20 mA)
Input signal	3-wire potentiometer 1 kOhm … 100 kOhm	3-wire potentiometer 1 kOhm … 100 kOhm
Measuring channels	1	1
Relay outputs	2 Relays / Normally open / Programmable 230 V AC / 2 A / 500 VA	4 Relays / Normally open / Programmable 230 V AC / 2 A / 500 VA
Dimensions	W 45,0 x H 75,0 x D 110,0 mm	W 55,0 x H 75,0 x D 110,0 mm
Ambient temperature	0°C … 55°C	0°C … 55°C
Atmospheric humidity	< 95% RH (not condensed)	< 95% RH (not condensed)
Weight	325 g	345 g
Ingress protection class (Housing connections)	IP 40 IP 20	IP 40 IP 20
Display	4-digit 7-segment LED display in red Size 7,6 mm Free scaling	4-digit 7-segment LED display in red Size 7,6 mm Free scaling
EMV 2004/108/EG	EN 61000-6-2 / EN 61000-6-3 EN 61000-4-2 EN 61000-4-3 EN 61000-4-6 EN 61000-4-13	EN 61000-6-2 / EN 61000-6-3 EN 61000-4-2 EN 61000-4-3 EN 61000-4-6 EN 61000-4-13
Programming	Programming buttons	Programming buttons
Alignment	Free programmable Lineariseable (only for MULE2 …)	Free programmable Lineariseable (only for MULE4 …)
Approvals / Certificates	GL / BV	GL / BV

ACCESSORIES FOR MAGNETIC LEVEL GAUGES

CONTROL UNIT

Type: 5714D

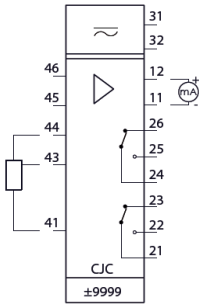

Type: 5715D

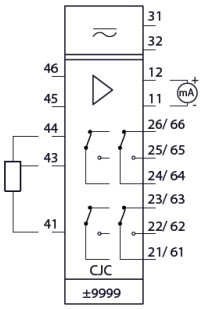

Code: 5714D …
5715D …

Type: 5531B

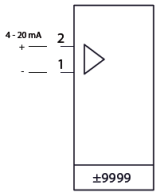

Type: 5531B2 (in field frame)

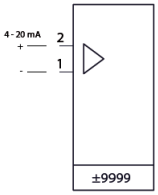

Code: 5531B …
5531B2 …

Technical data:

Type	5714D	5715D	5531B	5531B
Power supply	22 … 250 V AC / DC	22 … 250 V AC / DC	-	-
Current input	-	-	-	-
Current output	0 … 20 mA / 4 … 20 mA	0 … 20 mA / 4 … 20 mA	-	-
Error alarm	-	-	-	-
Input signal	PT-100 (-200°C ... 850°C) 3-wire potentiometer 10 kOhm … 100 kOhm	PT-100 (-200°C ... 850°C) 3-wire potentiometer 10 kOhm … 100 kOhm	4 ... 20 mA	4 ... 20 mA
Measuring channels	1	1	1	1
Relay outputs	2 Relays / Change over 230 V AC / 2 A / 500 VA	2 Relays / Change over 230 V AC / 2 A / 500 VA	-	-
Dimensions Housing material quality	W 96,0 x H 48,0 x D 120,0 mm -	W 96,0 x H 48,0 x D 120,0 mm -	W 96,0 x H 48,0 x D 120,0 mm -	W 112,0 x H 92,0 x D 143,0 mm Al Mg Si 0,5; DIN 1725
Mounting dimensions	W 91,5 x H 44,5 mm	W 91,5 x H 44,5 mm	W 91,5 x H 44,5 mm	W 91,5 x H 44,5 mm
Ambient temperature	-20°C … 60°C	-20°C … 60°C	-20°C … 60°C	-20°C … 60°C
Atmospheric humidity	< 95% RH (not condensed)	< 95% RH (not condensed)	< 95% RH (not condensed)	< 95% RH (not condensed)
Weight	230 g	260 g	150 g	900 g
Ingress protection class	IP 65 (Front)	IP 65 (Front)	IP 65 (Front)	IP 65
Display	4-digit 14-segment LED Display in red Size 13,8 mm Free scaling	4-digit 14-segment LED Display in red Size 13,8 mm Free scaling	4-digit LCD display Size 16 mm	4-digit LCD display Size 16 mm
EMV 2004/108/EG ATEX 94/9/EG (only for 5531B and 5531B2)	EN 61326-1	EN 61326-1	EN 61326-1 EN 50014 EN 50020 EN 60079-15 EN 61241-0, -11	EN 61326-1 EN 50014 EN 50020 EN 60079-15 EN 61241-0, -11
Intrinsically safe data	-	-	$U_i \leq 45$ V DC $I_i \leq 500$ mA $P_i \leq 0,9$ W $L_i \leq 0$ mH $C_i \leq 0$ µF	$U_i \leq 45$ V DC $I_i \leq 500$ mA $P_i \leq 0,9$ W $L_i \leq 0$ mH $C_i \leq 0$ µF
Programming	Programming buttons	Programming buttons	Programming buttons	Programming buttons
Alignment	Free programmable	Free programmable	-	-
Approvals / Certificates	GOST / DNV / UL	GOST / DNV / UL	ATEX / GOST	ATEX

MAGNETIC FLOAT SWITCHES

Functional description:
The magnetic float switch works according to the float principle and by using magnetic transmission (permanent magnet / reed contact).
A float wit a built-in magnetic system is conducted along a non-magnetic guide tube. Due to the magnetic field of the permanent magnet, a reed contact (protective gas contact), located in the guide tube, will be activated, after a defined height has been reached. As a result the electric circuit will be closed or interrupted, depending on the switch function.
Depending on the number of preset switching functions and their intervals, the device will be equipped with one or more floats.

Application area:
Magnetic float switches are used for the monitoring of the filling level and the controlling of liquid media and they may be installed into vessels and tanks which meet the technical requirements, i.e. which are designed for the according operating parameters.
Due to the potential-free reed contacts the magnetic float switches form an ideal switching element in connection with PLC controlling.

Design limits:

Specific gravity:	$\geq$ 400 kg/m^3
Design pressure:	-1 bar … 150 bar
Design temperature:	-50°C … 250°C

Electrical connection:

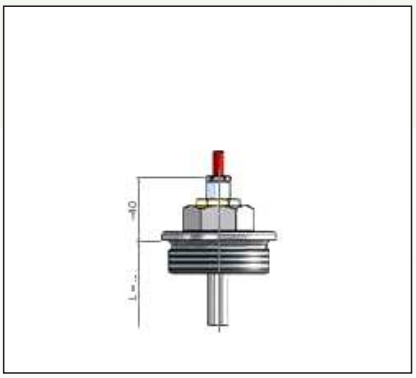

Connection type: K
Material quality: according as cable type
Cable entry: PG or metric
Ingress protection class: IP 55 (optional IP 68)
Ambient temperature: -40°C … 200°C

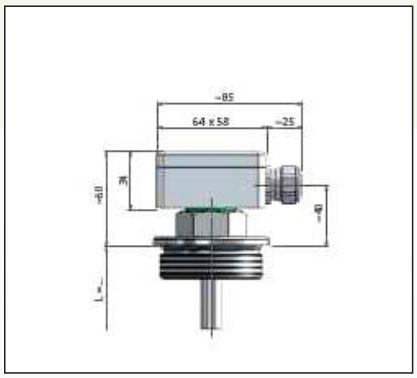

Connection type: ALE
Material quality: aluminium coated RAL 7001
Cable entry: M20 x 1.5
Ingress protection class: IP 65
Ambient temperature: -40°C … 100°C

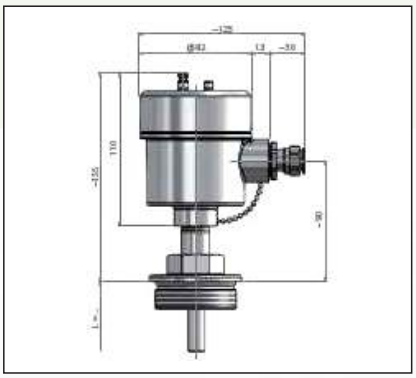

Connection type: AVA / AVDA (Exd)
Material quality: stainless steel A4 (S.S. 316)
Cable entry: M20 x 1.5
Ingress protection class: IP 67 (Exd IP 68)
Ambient temperature: -40°C … 85°C

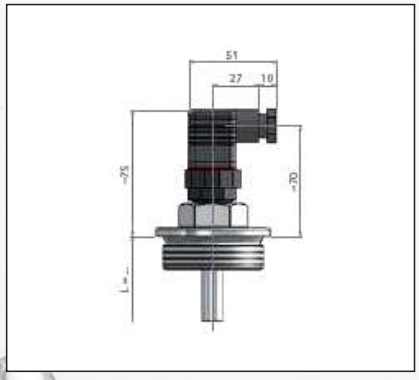

Connection type: ASH
Material quality: PA
Cable entry: M16
Ingress protection class: IP 65
Ambient temperature: -40°C … 125°C

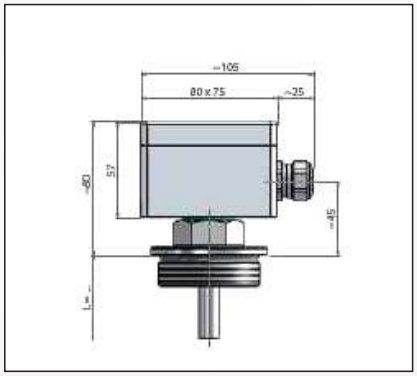

Connection type: ALF
Material quality: aluminium coated RAL 7001
Cable entry: M20 x 1.5
Ingress protection class: IP 65
Ambient temperature: -40°C … 100°C

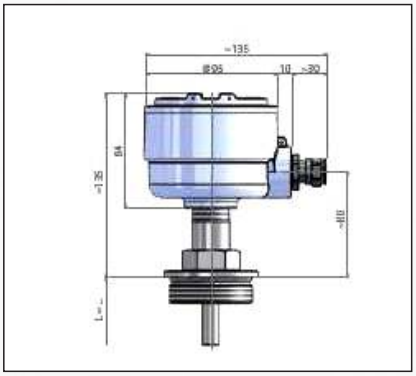

Connection type: ALDA (Exd)
Material quality: aluminium coated RAL 9006
Cable entry: M20 x 1.5
Ingress protection class: IP 68
Ambient temperature: -40°C … 100°C

Approvals / Certificates:

ATEX*
II 1/2G Ex ia c IIC T6 - T3 II 2D Ex tD A21 c IP6* T80°C - T190°C
II 1/2G Ex d c IIC T6 - T4
Liquid temperature Ex ia max. 180°C / Ex d max. 120°C

Type of protection intrinsic safety Ex ia IIC switch bzw. temperature switch	I_i	≤100 mA			
Type of protection intrinsic safety Ex ia IIC temperature probe	U_i	≤28 V	I_i	≤100 mA	P_i ≤700 mW
Type of protection intrinsic safety Ex ia IIC with option/N (NAMUR EN 60947)	U_i	≤15 VDC	I_i	≤60 mA	
Type of protection “moulding”	U_N	≤250 VDC/AC	P_{SN}	≤50 W/VA	P_{FN} ≤700 mW
Type of protection “moulding” with option/N (NAMUR EN 60947)	U_N	≤15 VDC	I_N	≤60 mA	
Type of protection “moulding” with option/R22 (resistor)	U_N	≤250 VDC/AC	I_N	≤100 mA	

* = The approval is dependent on the equipment combination

DIESSE S.r.l.
Fluid Control

MAGNETIC FLOAT SWITCHES

Type:	**ALE/V/R-1½ -V/…-L …/12-SVK44/15/A**	**ALE/V/R-2-V/…-L …/12-SV52/15/A**
Material:	316L / 316Ti (optional other materials)	316L / 316Ti (optional other materials)
Electrical connection:	ALE aluminium terminal box	ALE aluminium terminal box
Process connection:	G 1" ½ (optional flanged)	G 2" (optional flanged)
Guide tube:	Ø 12 mm (optional Ø 14 mm)	Ø 12 mm (optional Ø 14 mm)
Length of instrument:	≤ 5000 mm*	≤ 5000 mm*
Float:	SVK44/15/A Ø 44m	SVK52/15/A Ø 52 mm
Specific gravity:	≥ 800 kg/m^3	≥ 680 kg/m^3
Design pressure:	-1 bar … 25 bar	-1 bar … 30 bar
Design temperature:	-30°C … 180°C (optional 250°C)	-30°C … 180°C (optional 250°C)
Ingress protection class:	IP 65	IP 65
Mounting position:	Vertical +/-30°	Vertical +/-30°
Level switch function		
Function:	Normally open / S	Normally open / S
Switching capacity:	230 V / 1.0 A / 100 VA	230 V / 1.0 A / 100 VA
Maximal number of contacts:	4 pieces (5 pieces with ALF terminal box)	4 pieces (5 pieces with ALF terminal box)
Function:	Normally closed / O	Normally closed / O
Switching capacity:	230 V / 0.5 A / 40 VA	230 V / 0.5 A / 40 VA
Maximal number of contacts:	4 pieces (5 pieces with ALF terminal box)	4 pieces (5 pieces with ALF terminal box)
Function:	Change over / U	Change over / U
Switching capacity:	230 V / 0.5 A / 40 VA	230 V / 0.5 A / 40 VA
Maximal number of contacts:	3 pieces (4 pieces with ALF terminal box)	3 pieces (4 pieces with ALF terminal box)

* ATEX design = if length of instrument ≥ 4000 mm please choose different material quality for guide tube and float

Minimum measures
ALE/V/R-1 ½ -V/…-L …/12-SVK44/15/A
L1: ≥ 50 mm
U: 45
Contact distance: ≥ 20 mm
Float distance: ≥ 70 mm

Approvals / Certificates
ATEX / PED / GOST / GL / BV / ABS / WHG / SIL1

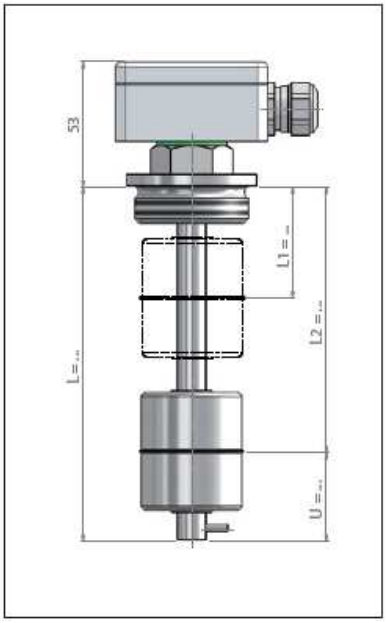

Minimum measures
ALE/V/R-2-V/…-L …/12-SV52/15/A
L1: ≥ 55 mm
U: 45
Contact distance: ≥ 20 mm
Float distance: ≥ 70 mm

Approvals / Certificates
ATEX / PED / GOST / GL / BV / ABS / WHG / SIL1

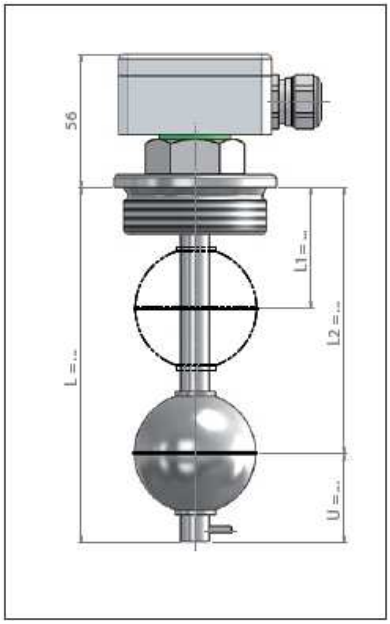

MAGNETIC FLOAT SWITCHES

Displacer type:	**ALE/V/FE-25/16/B1-V/…-M…/12/V/60/2-SVK44/15/A-HH**	**ALE/ST/ERVE-1/4-V/…-M55/12/AL/64/3.50-SVK44/15/A-HH**
Material:	316L / 316Ti	Stainless steel / Aluminium
Electrical connection:	ALE aluminium terminal box	ALE aluminium terminal box
Process connection:	Flange EN DN25 / PN16 / Form B1	Cutting ring union / Ø 10 mm
Bypass chamber:	Ø 60.3 mm x 2 mm	Ø 64 mm x 3.5 mm, Aluminium
Centre distance:	≤ 1000 mm	55 mm
Float:	SVK44/15/A Ø 44m	SVK44/15/A Ø 44m
Specific gravity:	≥ 800 kg/m^3	≥ 800 kg/m^3
Design pressure:	-1 bar … 16 bar	-1 bar … 6 bar
Design temperature:	-30°C … 180°C (optional 250°C)	-30°C … 150°C
Ingress protection class:	IP 65	IP 65
Mounting position:	Vertical +/-30°	Vertical +/-30°
Level switch function		
Function:	Normally open / S	Normally open / S
Switching capacity:	230 V / 1.0 A / 100 VA	230 V / 1.0 A / 100 VA
Maximal number of contacts:	4 pieces (5 pieces with ALF terminal box)	1 piece
Function:	Normally closed / O	Normally closed / O
Switching capacity:	230 V / 0.5 A / 40 VA	230 V / 0.5 A / 40 VA
Maximal number of contacts:	4 pieces (5 pieces with ALF terminal box)	1 piece
Function:	Change over / U	Change over / U
Switching capacity:	230 V / 0.5 A / 40 VA	230 V / 0.5 A / 40 VA
Maximal number of contacts:	3 pieces (4 pieces with ALF terminal box)	1 piece

Minimum measures
ALE/V/FE-25/16/B1-V/…-M…/12/V/60/2-SVK44/15/A-HH
L1: ≥ 130 mm
U: 45
Contact distance: ≥ 20 mm
Float distance: ≥ 70 mm

Approvals / Certificates
ATEX / PED / GOST / GL / BV / ABS / SIL1

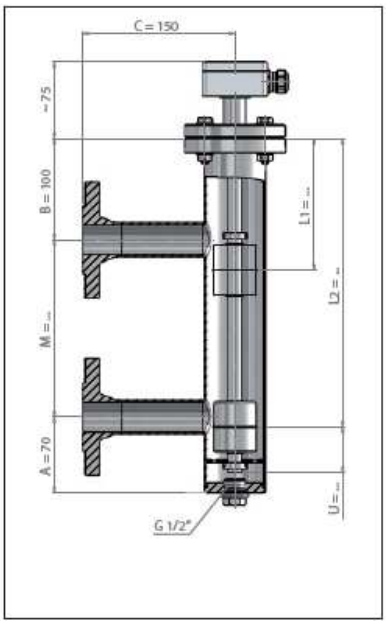

Minimum measures
ALE/ST/ERVE-1/4-V/…-M55/12/AL/64/3.50-SVK44/15/A-HH
L1: ≥ 45 mm

Approvals / Certificates
ATEX / PED / GOST / GL / BV / ABS / SIL1

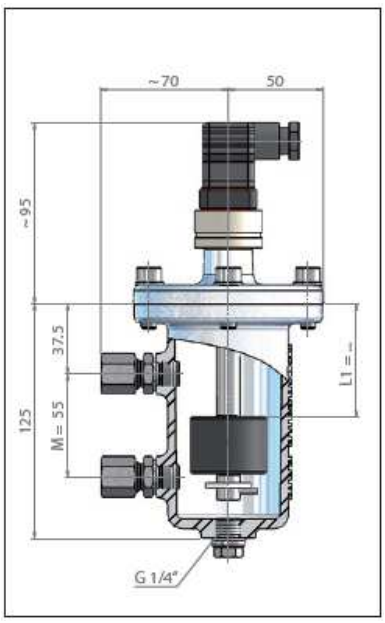

MAGNETIC FLOAT TRANSMITTERS

Functional description:
The magnetic float level transmitter device serves as a reading recorder for the electrical, continuous remote indication of the filling level.
The operation of the measuring devices is based on the float principle.
Through the wall of a guide tube the magnetic field, which is contained in the spherical or cylindrical float, triggers reed contacts, which uninterruptedly pick up the measuring voltage given at a resistance measuring chain.
The measuring voltage is proportional to the height of the filling level (3-wire potentiometer circuit).
The size of the reed contacts is made up in different accuracy's.
In connection with a control unit the resistance value can be converted into a standardised analogue value, e.g. 4 … 20 mA.

Application area:
Magnetic float level transmitter are exclusively meant for the monitoring of the filling level of liquid media and may be installed into vessels and tanks which meet the technical requirements, i.e. which are designed for the according operating parameters.
All materials which will come in touch with the liquid medium have to be invariable, accordingly.

Design limits:

Specific gravity:	$\geq$ 400 kg/m^3
Design pressure:	-1 bar … 150 bar
Design temperature:	-50°C … 250°C

Electrical connection:

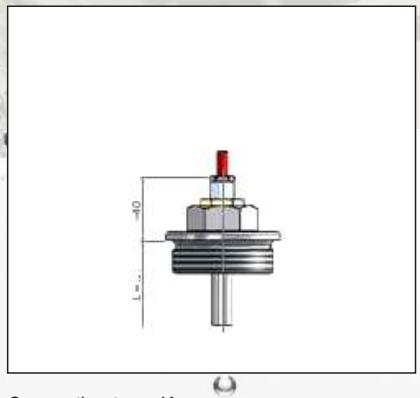

Connection type: K
Material quality: according as cable type
Cable entry: PG or metric
Ingress protection class: IP 55 (optional IP 68)
Ambient temperature: -40°C … 200°C

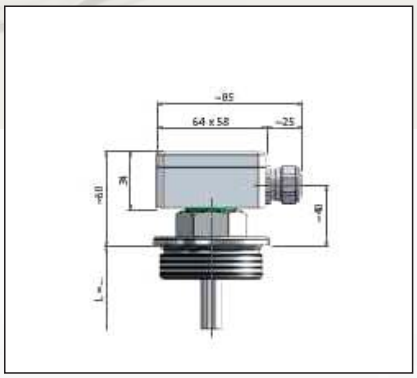

Connection type: ALE
Material quality: aluminium coated RAL 7001
Cable entry: M20 x 1.5
Ingress protection class: IP 65
Ambient temperature: -40°C … 100°C

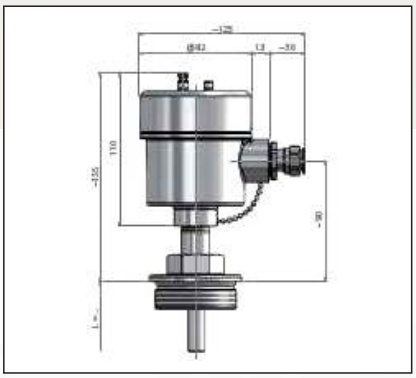

Connection type: AVA / AVDA (Exd)
Material quality: stainless steel A4 (S.S. 316)
Cable entry: M20 x 1.5
Ingress protection class: IP 67 (Exd IP 68)
Ambient temperature: -40°C … 85°C

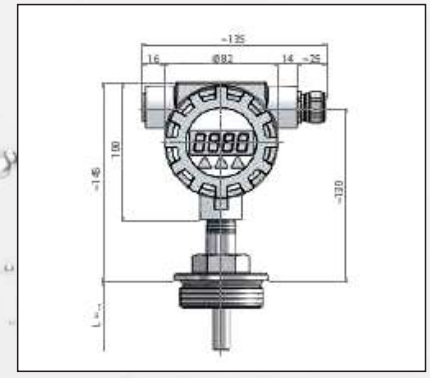

Connection type: DAALA
Material quality: aluminium
Cable entry: M20 x 1.5
Ingress protection class: IP 65
Ambient temperature: -40°C … 60°C

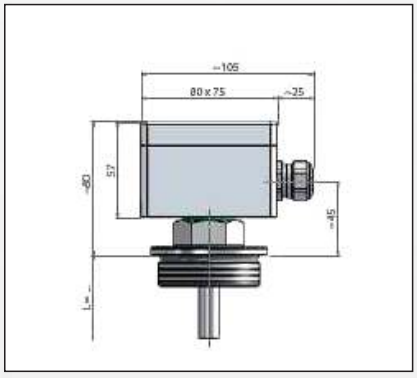

Connection type: ALF
Material quality: aluminium coated RAL 7001
Cable entry: M20 x 1.5
Ingress protection class: IP 65
Ambient temperature: -40°C … 100°C

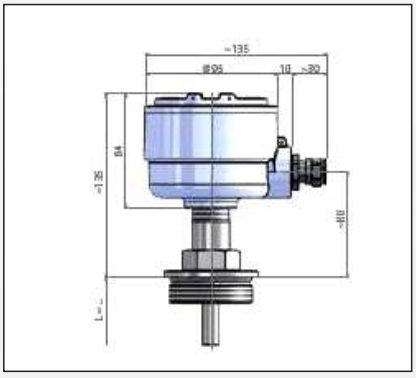

Connection type: ALDA (Exd)
Material quality: aluminium coated RAL 9006
Cable entry: M20 x 1.5
Ingress protection class: IP 68
Ambient temperature: -40°C … 100°C

Approvals / Certificates:

ATEX*

II 1/2G Ex ia c IIC T6 - T3	II 1/2G	Ex ia c IIC T6 - T3 bzw. Ex d ia c IIC T6 - T4		II 2G Ex d c IIC T6 - T4
II 1/2G Ex d c IIC T6 - T4	II 2D	Ex tD A21 c IP6* T80°C - T190°C bzw. T125		

Liquid temperature Ex ia max. 180°C / Ex d max. 120°C

Type of protection intrinsic safety Ex ia IIC switch bzw. temperature switch	Ii ≤100 mA			
Type of protection intrinsic safety Ex ia IIC temperature probe	Ui ≤28 V	Ii ≤100 mA	Pi	≤700 mW
Type of protection intrinsic safety Ex ia IIC with option/N (NAMUR EN 60947)	Ui ≤15 VDC	Ii ≤60 mA		
Type of protection “moulding”	UN ≤250 VDC/AC	PSN ≤50 W/VA	PFN	≤700 mW
Type of protection “moulding” with option/N (NAMUR EN 60947)	UN ≤15 VDC	IN ≤60 mA		
Type of protection “moulding” with option/R22 (resistor)	UN ≤250 VDC/AC	IN ≤100 mA		

* = The approval is dependent on the equipment combination

DIESSE S.r.l.
Fluid Control

MAGNETIC FLOAT TRANSMITTERS

Type:	**ALE/V/R-1½ -V/K…-L …/12-SVK44/15/V**	**ALE/V/R-2-V/K…-L …/12-SV52/15/V**
Material:	316L / 316Ti (optional other materials)	316L / 316Ti (optional other materials)
Electrical connection:	ALE aluminium terminal box	ALE aluminium terminal box
Process connection:	G 1" ½ (optional flanged)	G 2" (optional flanged)
Guide tube:	Ø 12 mm (accuracy type K5 … Ø 14 mm)	Ø 12 mm (accuracy type K5 … Ø 14 mm)
Length of instrument:	≤ 5000 mm*	≤ 5000 mm*
Float:	SVK44/15/V Ø 44m	SVK52/15/A Ø 52 mm
Specific gravity:	≥ 800 kg/m^3	≥ 700 kg/m^3
Design pressure:	-1 bar … 25 bar (depending on temperature)	-1 bar … 40 bar (depending on temperature)
Design temperature:	See accuracy	See accuracy
Ingress protection class:	IP 65	IP 65
Mounting position:	Vertical +/-30°	Vertical +/-30°
Accuracy:		
Type K … (-30°C … 130°C)	Accuracy: 5 / 10 / 12.7 / 15 mm	Accuracy: 5 / 10 / 12.7 / 15 mm
Type K … HTF (-30°C … 200°C)	Accuracy: 5 / 10 / 15 mm	Accuracy: 5 / 10 / 15 mm
Type K … HT (-40°C … 250°C)	Accuracy: 5 / 10 / 15 mm	Accuracy: 5 / 10 / 15 mm
Control unit:	- Programmable - Hart-programmable - Profibus PA - Fondation Fieldbus	- Programmable - Hart-programmable - Profibus PA - Fondation Fieldbus

* ATEX design = if length of instrument ≥ 4000 mm please choose different material quality for guide tube and float

Minimum measures
ALE/V/R-1½ -V/K…-L …/12-SVK44/15/V
L1: ≥ 50 mm
U: 45

Approvals / Certificates
ATEX / PED / GOST / GL / BV / ABS / WHG

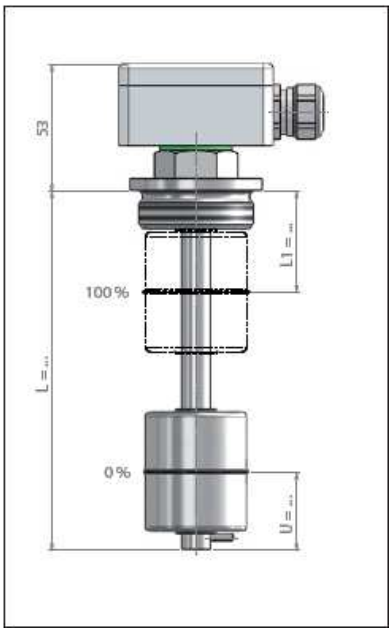

Minimum measures
ALE/V/R-2-V/K…-L …/12-SV52/15/V
L1: ≥ 55 mm
U: 45

Approvals / Certificates
ATEX / PED / GOST / GL / BV / ABS / WHG

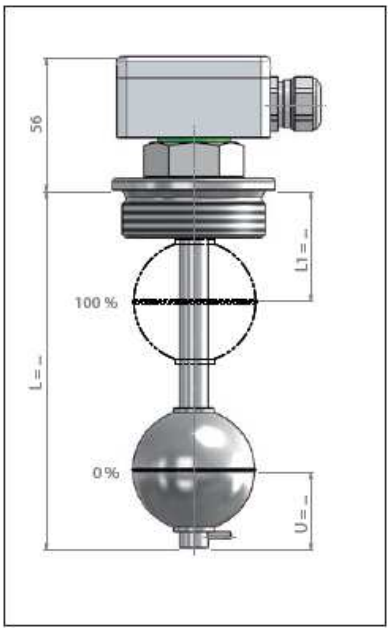

Alpha ENGENHARIA
ALPHA ENGENHARIA - Equipamentos e Soluções Industriais
Tel. 220 136 963 | Tlm: 933 694 486
info@alphaengenharia.pt | www.alphaengenharia.pt